WAIKATO AND UPPER NORTH ISLAND VOLTAGE MANAGEMENT

MAJOR CAPEX PROPOSAL

Transpower New Zealand Limited

December 2019

Keeping the energy flowing


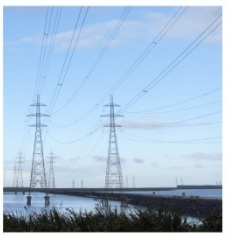
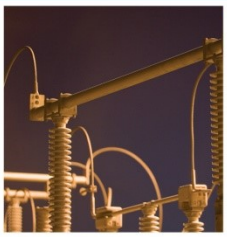


TRANSPOWER

Transpower New Zealand Limited The National Grid

Table of Contents

Glossary

AOVCS	Automated over-voltage capacitor switching scheme. A protection-based scheme to rapidly switch shunt capacitors post fault.
Capex IM	Transpower Capital Expenditure Input Methodology Determination, New Zealand Commerce Commission[1].
Code	Electricity Industry Participation Code 2010.
Demand management	The use of demand reduction pre and/or post-fault.
Dynamic reactive device	Dynamic reactive devices can provide variable amounts of reactive power in a few milliseconds. Common examples are static var compensators (SVCs), static synchronous compensators (STATCOMs), and synchronous condensers. All are capable of rapid dynamic response.
EDGS	Electricity Demand and Generation Scenarios.
GEIP	Good electricity industry practice.
Grid Reliability Standards	The grid reliability standards (GRS) are a set of standards against which the reliability performance of the existing grid (or future developments to it) can be assessed as defined in the Code (schedule 12.2).
GSC	Grid support contract, used for non-transmission solutions.
GXP	Grid exit point.
Immediate investment horizon	The period from 2023 until the end of 2024 which is the subject of our Major Capex Project application with the Commerce Commission.
Investment Test	The Capex Input Methodology defines the 'Investment Test' as the detailed assessment required for Major Capex Projects.
Long-list consultation	Transpower's consultation document entitled Waikato and Upper North Island Voltage Management Long-list consultation July 2016.
LRMC	Long-run marginal cost.
MBIE	Ministry of Business, Innovation and Employment.
MCP	Major Capex Proposal, as defined by the Capex IM
MWh	Megawatt hour of electrical energy.
N-1	A security standard that ensures with all facilities in service Transpower's transmission system remains in a satisfactory state following a single fault (e.g. a circuit outage).
N-G-1	A security standard that ensures with a generator out of service Transpower's transmission system remains in a satisfactory state following a single fault event (e.g. a circuit outage). The 'G' in N-G-1 is also a proxy for slightly less severe transmission equipment contingencies.
P50 / P90	Expected (P50) and prudent (P90) peak demand forecasts. P50 is the 50th percentile of the peak demand forecast probability distribution, while our prudent forecast is equal to the 90th percentile.

[1] See http://www.comcom.govt.nz/regulated-industries/electricity/electricity-transmission/

PU	Per-unit voltage is the expression of system voltage as fractions of a defined base voltage (e.g. 110 kV, 220 kV).
Present Value	Future costs discounted to a present value using an assumed discount rate.
Rankine	A type of coal/gas generation unit owned and operated by Genesis Energy at Huntly.
RFI	Request for information.
SDDP	Stochastic dual dynamic programming – a market dispatch model used to determine the optimal dispatch of hydro, thermal and other renewable generation.
Short-list consultation	Transpower's consultation document entitled Waikato and Upper North Island Voltage Management Short-list Consultation June 2019.
STATCOM	A static synchronous compensator is a device that provides fast reactive power compensation.
SVC	A static var compensator is a device that provides fast reactive power compensation.
TOV	Transient over-voltage.
TPM	Transmission Pricing Methodology, defined in Schedule 12.4 of the Code.
Transpower	Transpower New Zealand Limited, owner and operator of New Zealand's high-voltage electricity network (the national grid).
TSR	Thyristor switched reactors can absorb varying amounts of reactive power to address over-voltage conditions.
UNI	Upper North Island region – the region north of Huntly.
UNIDRS	Upper North Island Dynamic Reactive Support project.
Voltage sensitive load	Electrical load that is sensitive to fluctuations in the supplied voltage. Such loads include inductive motors (e.g. industrial motors) that will react following a fault impacting system voltage recovery.
WUNI	Waikato and Upper North Island.
WUNIVM	Waikato and Upper North Island Voltage Management.

Executive summary

The purpose of this document

This proposal seeks approval to recover the costs of undertaking investment to maintain voltage stability in the Waikato and Upper North Island. This is the first stage of a Major Capex Project (Staged).

Proposal at a glance	
What:	Maintain voltage stability in the Waikato and Upper North Island through investing in: • One dynamic reactive device in the Upper North Island capable of delivering (within 10%) 150 Mvar capacitive to 150 Mvar inductive at nominal voltage. • One dynamic reactive device in the Waikato capable of delivering (within 10%) 150 Mvar capacitive to 150 Mvar inductive at nominal voltage. • A post-fault demand management scheme in the Waikato and Upper North Island. • Preparatory works for stage 2[2], including additional investigation, consultation, obtaining property rights and environmental approvals, design work and non-binding tendering for future series capacitors and installation works on the BHL-WKM 1&2 transmission line.
When:	Commence work as soon as funding is approved. Commissioning date assumption (for assets other than preparatory works for stage 2): 31 December 2022
How much:[3]	Transpower is seeking approval for the first stage of a major capex project (staged) with a major capex allowance of $144.5 million.
Incentive elements:	Major capex incentive rate: 15% Exempt major capex: none
Approval expiry date:	31 December 2029

[2] Stage 2 of the investment proposal is the procurement and installation of series capacitors on BHL-WKM 1&2.

[3] The major capex allowance is in nominal New Zealand dollars, excluding GST.

The need for investment

There have been actual and announced decommissionings of major generation capacity in the Waikato and Upper North Island (WUNI), with a reduction of over 1000 MW of generation since 2012.

This is a significant change for the New Zealand power system, especially when coupled with the actual and forecast demand growth in the WUNI region. Transpower conducted a number of analyses in late 2015 and early 2016[4], and identified issues with both voltage management in the Waikato and the Upper North Island, and thermal transfer into the region[5].

The voltage management issues have been investigated as the Waikato and Upper North Island Voltage Management (WUNIVM) Investigation. This investigation led to the notification to the Commerce Commission of our intent to submit an application under the Major Capex Project (MCP) process. We undertook our long-list consultation under that process in July 2016 and subsequently a short-list consultation in June 2019[6].

The power system has long relied on generation in the Auckland area and at Huntly for voltage support. Following the proposed retirement of the remaining two 250 MW units at Huntly – and forecast demand growth in the WUNI region – we need to enhance the voltage stability provision of the transmission system in the region. Given current information that these units may retire by the end of 2022, the need date for investment to manage voltage issues is ahead of winter 2023. This project timeline, allowing for regulatory approval, procurement, detailed design, build and commissioning, is tight.

The need is to maintain voltage stability in the WUNI region. The key risks are transient (i.e. very fast occurring) and include both under- and over-voltage effects, making the investigation complex in nature.

Voltage stability

Maintaining voltage stability requires preventing the voltage falling too low or rising too high. Under-voltage issues are expected to arise in the WUNI region as load increases and the remaining Huntly Rankine generation is decommissioned. At peak load levels in the WUNI region we found significant transient over-voltage can occur following a severe fault[7] that trips voltage sensitive load (such as induction motors) due to low voltages.

---

[4] See www.transpower.co.nz/upper-north-island-generation-decommissioning-report-and-appendices and www.systemoperator.co.nz/activites/current-projects/impact-thermal-generator-decommissioning.

[5] The term 'thermal' is used here to describe transmission limits to power transfer, called thermal because the limit is related to the temperature of the conductors. Not to be confused the term 'thermal decommissioning', called thermal because it related to gas and coal fired generation.

[6] Both available at www.transpower.co.nz/waikato-and-upper-north-island-voltage-management-investigation.

[7] Please see the Power System Analysis report for more detail on faults.

Reduced generation from thermal decommissionings combined with load growth has introduced this risk of post-fault transient over-voltage. Currently, the likelihood of this risk is considered very low, and is therefore classified as an 'Other Event'[8] by the System Operator. As further generation retires and demand grows, the transient over-voltage risk will increase significantly. Due to the long lead time to commission additional dynamic reactive support, this drives an urgent need to be addressed.

The voltage stability limits identified from static and dynamic modelling are used to inform WUNI load limits to avoid voltage instability. Even if the Huntly Rankine units are not decommissioned, and rather retained or replaced, we expect that load growth in the region will result in the risk of N-1 voltage stability limits being exceeded from as early as winter 2024 under a prudent forecast, rising with continued demand growth.

The consequence of exceeding voltage stability limits could be severe, with the strong possibility of widespread voltage collapse of the grid should particular faults occur, resulting in an extensive blackout and the need to systematically 'black start' the grid.

Option identification and assessment

We have considered a variety of options to identify a solution that meets the need and is both robust and adaptable to the range of foreseeable outcomes.

Our approach first identified a long-list of components that could contribute to meeting the voltage stability need. Following submissions on our long-list and further analysis into the over-voltage risk, the long-list of components evolved to include additional items.

To both meet the need and maintain it with the expected demand growth – and with reactive devices being relatively modular – each option includes a collection of components used to optimise investment in voltage stability equipment over time.

Each component was included in an option to address a particular aspect of the voltage stability need across the WUNI region. These include:

- Dynamic reactive devices that can inject and absorb continuously variable amounts of reactive power in a few milliseconds.
- Series capacitors which reduce the impedance (electrical length) of a transmission line and improve system stability.
- A post-fault demand management scheme in the WUNI region which covers the risk of specific extremely low probability faults.
- Shunt capacitors which prevent a slow voltage collapse by supporting the voltage level pre-fault and allowing a sufficient margin for dynamic reactive devices to react to transient events.
- Non-transmission solutions, which may defer or supplement the need for transmission components.

[8] 'Other Events' are events that are not managed pre- or post-fault, rather they rely on post-event restoration – as defined in the system operator's Policy Statement. See www.transpower.co.nz/policy-statement.

Short-listed options were prepared to assess the contribution of different levels of investment in voltage support during the period of our immediate investment horizon – 2023 to the end of 2024. While we have formed options to cover this period, we are only seeking approval of the full cost of stage 1 components. Stage 2 components will be the subject of a future application. We forecast an on-going need for dynamic reactive support in the WUNI region and have included such investment as modelled projects within our economic analysis out to 2045.

Table 1 shows the short-list options we have assessed in this investigation.

Table 1 - Short-listed options

	Stage 1 (commissioned before winter 2023)	Stage 2 (commissioned before winter 2024)
Defer investment until end of 2028 (N security)	No investment	No investment
Option 1 - NTS **(N-G-1)**	Pre-fault demand management as an NTS	
Option 2 **(N-G-1 security with demand management)**	2 × ±150 Mvar dynamic reactive devices, at OTA 220 and HAM 110 45% series capacitors on BHL-WKM 1&2 Post-fault demand management scheme	
Option 3 **(N-1 security)**	2 × ±150 Mvar dynamic reactive devices, at OTA 220 and HAM 110 Post-fault demand management scheme	45% series capacitors on BHL-WKM 1&2
Option 4 **(N-G-1 security)**	2 × ±150 Mvar dynamic reactive devices, at OTA 220 and HAM 110 45% series capacitors on BHL-WKM 1&2 Third ±150 Mvar dynamic reactive device 150 Mvar shunt capacitors	Fourth ±150 Mvar dynamic reactive device 75 Mvar shunt capacitors
Option 5 **(N-1 security)**	2 × ±150 Mvar dynamic reactive devices, at OTA 220 and HAM 110 Post-fault demand management scheme	Third ±150 Mvar dynamic reactive device 150 Mvar shunt capacitors
Option 6 **(N security)**	2 × ±150 Mvar dynamic reactive devices, at OTA 220 and HAM 110 Post-fault demand management scheme	

For each short-list option, we have assessed the following quantified costs and benefits.

- Stage 1 and stage 2 capital and operations and maintenance (O&M) costs
- Unserved energy benefits

- Future modelled project capital costs
- Transmission loss benefits

In addition, we have assessed the following unquantified costs and benefits.

- Environment – global
- Competition benefits
- Unquantified unserved energy benefits
- Operational benefits
- Optionality

Table 2 shows our quantified and unquantified assessment of these options.

Table 2: Quantitative and Qualitative ranking of options, $m, 2019 dollars

	Defer invest-ment	Option 1 (NTS)	Option 2	Option 3	Option 4	Option 5	Option 6
Security standard	N	N-G-1	N-G-1 (with demand mgmt.)	N-1	N-G-1	N-1	N
Net-benefit	$0	-$666	$155	$155	$94	$72	$62
Unquantified benefits ranking	**7**	**3=**	**3=**	**1=**	**3=**	**1=**	**6**
Overall ranking	**6**	**7**	**2**	**1**	**4**	**3**	**5**

In our base-case net-benefit analysis, we assess options 2 and 3 as having the highest net-benefit. Our sensitivity analysis also confirms options 2 and 3 as having the highest net-benefit in all sensitivity scenarios except one. Therefore, we consider option 2 and option 3 to be robust to uncertainty in the key input parameters to our economic modelling.

Options 2 and 3 both make use of the post-fault demand management scheme. While such schemes have the potential to cause a loss of supply when operated, we consider that such occurrences will be rare. Option 4 provides an alternative to the scheme options by covering this risk with primary plant rather than the scheme. Table 2 indicates option 4 has a significantly lower net-benefit than options 2 and 3. This is because we have assessed the additional capital cost of option 4 as greater than the benefit it provides (due to the very low probability of the scheme operating). Furthermore, option 4 does not have the highest net-benefit in any sensitivity scenario, including if we assume a higher probability of the scheme operating. Therefore, we have concluded option 4 and its higher level of security is not preferred due to lower net-benefits.

When considering unquantified benefits, the Capex IM considers two options as being similar if the difference in their net benefits is less than 10% of the proposed capital cost of

the option with the highest net-benefit[9]. In this case, options 2 and 3 have the same net-benefit so we consider the unquantified benefits of each option.

Option 2 has significantly higher competition, operational, and unserved energy unquantified benefits than option 3 as it provides for stable voltage support into the WUNI region without relying on the single remaining major generator in the WUNI region. As a result, we conclude N-G-1 (with demand management) is the optimal and preferred long-term security standard for the WUNI region.

However, we have given significant weight to the optionality that option 3 provides. Given the current uncertain future of the Rankine units we do not consider it economically prudent to commit considerable expenditure on the series capacitors at this time. Doing so risks commissioning the series capacitors earlier than they would be needed if the Rankine units were to stay. Therefore, we conclude option 3 is our preferred option.

If the Rankine units do retire in 2022 (or we receive no new information) and there are no other demand or generation developments, we will undertake additional consultation on the series capacitors with the intention of applying for them in a stage 2 proposal with a commissioning date before winter 2024. To reduce the lead time needed to commission the series capacitors, we are seeking approval for preparatory works for the series capacitors in this proposal.

We will investigate the use of non-transmission solutions to help deliver N-G-1 security (with demand management) during 2023 (and as a risk mitigation measure should the Rankine units retire earlier than 2022 or demand grow unexpectedly).

New information received during the approval process

If we receive new material information after we have submitted our application, we will either revise our MCP or, if necessary, seek an amendment to the approved project to reflect our revised preferred option.

The two most likely sources of new, material information are non-transmission solutions (NTS) and announcements on market generation in the WUNI region:

- In parallel[10] to this MCP application we are undertaking a request for information (RFI) process to identify any non-transmission solutions (NTSs) such as dynamic voltage support, demand reduction and generation commitment that could securely and reliably defer or reduce the need for transmission investment. Should suitable responses be received, we will enter into a formal procurement process. We are also investigating the use of NTSs for risk mitigation due to unexpected demand growth and/or changes in generation availability.

[9] See Schedule D, Clauses (1)(c)(ii) and (2)(a) of the Capex IM.

[10] Given the proximity of the need date and lead times for investment approval and procurement, it was not practicable for the NTS procurement process to be completed before this MCP application was submitted. Furthermore, having the procurement process closer to the need date may allow for more competitive and economically viable offers.

- The need for this investigation is based in part on the proposed retirement of the remaining Huntly Rankine units in 2022. We understand options exist for new generation in the WUNI region, including possible retention of one or both of the remaining Rankine units. If a generator makes a commitment to such an action, then we may need to adapt our MCP or seek an amendment to the approved project reflecting our new preferred option. Based on our current prudent demand forecast, we would require at least one dynamic reactive device before winter 2024 if two Huntly Rankine units remain in-service, with another likely to be required in less than 3 years if demand continues to grow in-line with our current forecast.

1 The Proposal

This proposal concerns the need for reactive support in the Waikato and Upper North Island regions. Analysis since 2015 has shown that with additional demand growth and proposed generation retirement these regions will require significant reactive support to manage voltage stability.

The components in the box below are the grid outputs to be delivered by this stage 1 project. We also show the grid outputs we intend to propose in the second stage of this MCP.

Grid Outputs (Stage 1)

- Procure, install and commission two dynamic reactive devices, each capable of delivering (within 10%) 150 Mvar capacitive to 150 Mvar inductive at nominal voltage: one in the Upper North Island and the other in the Waikato.
- Design, install and commission a post-fault demand management scheme in the Waikato and Upper North Island.
- Preparatory works for stage 2, including additional investigation, consultation, obtaining property rights and environmental approvals, design work and non-binding tendering for future series capacitors and installation works on the BHL-WKM 1&2 transmission line.

Grid Outputs (Stage 2)

- Procure, install and commission series capacitors on the BHL-WKM 1&2 transmission lines.

We propose starting stage 1 of this work once approval is received with the intention of completing it by December 2022 in time for our identified need date of winter 2023.

We expect stage 1 of the project to cost $144.5 million once commissioned (based on a P50 estimate of cost). We are seeking Commerce Commission approval to recover the full costs associated with delivering these Grid Outputs, up to a total amount of $144.5 million.

1.1 Project staging and additional consultation

The decision to proceed with a staged MCP approach under the Capex IM is to reduce the cost and timing uncertainties of this project. By staging the second phase of the project (the series capacitors), we can undertake additional investigation into the cost of this component and allow us to calculate a more accurate major capex allowance. Furthermore, staging the series capacitors will allow us to better optimize the timing of this component, which may be affected by new information on demand growth and generation commissioning or decommissionings.

Therefore, we are not seeking approval for funding of equipment costs of stage 2 components as part of this proposal. However, to ensure that stage 2 can proceed with sufficient lead time to meet possible need dates for commissioned equipment we are seeking funding for its preparatory costs as part of this application. These costs include

industry consultation on the stage 2 preferred option, obtaining property and environmental approvals, additional design work and non-binding tendering for the series capacitors.

2 The Need

2.1 Background

Since 2012, over 1000 MW of generation capacity has been decommissioned in the Upper North Island and Waikato regions. This generation reduction coupled with the actual and expected demand growth in the Waikato and Upper North Island raises significant voltage stability risks. The potential loss of the two remaining Huntly Rankine units in 2022 further increases this risk.

Following the removal of thermal generation, we expect that the load in the Upper North Island (UNI) will be predominantly supplied from remote generation in the Central North Island and Taranaki areas. This increases the loading on transmission lines and existing reactive equipment making the UNI susceptible to poor voltage performance. We have identified that dynamic voltage stability after a major fault is the first limiting factor in supplying the UNI load.

Due to the features of the New Zealand's transmission network, the Waikato region (which also connects to the main corridor of the 220 kV transmission circuits into the UNI region) has an impact on the need for voltage support. Both the dynamic and static voltage stability limits in the WUNI region have reduced since the removal of generation.

The subject of this investigation is therefore voltage management in the Waikato and Upper North Island (WUNI) region. This region is illustrated schematically in Figure 1 and geographically in Figure 2 below.

Figure 1: Illustration of Waikato and UNI transmission system (schematic)

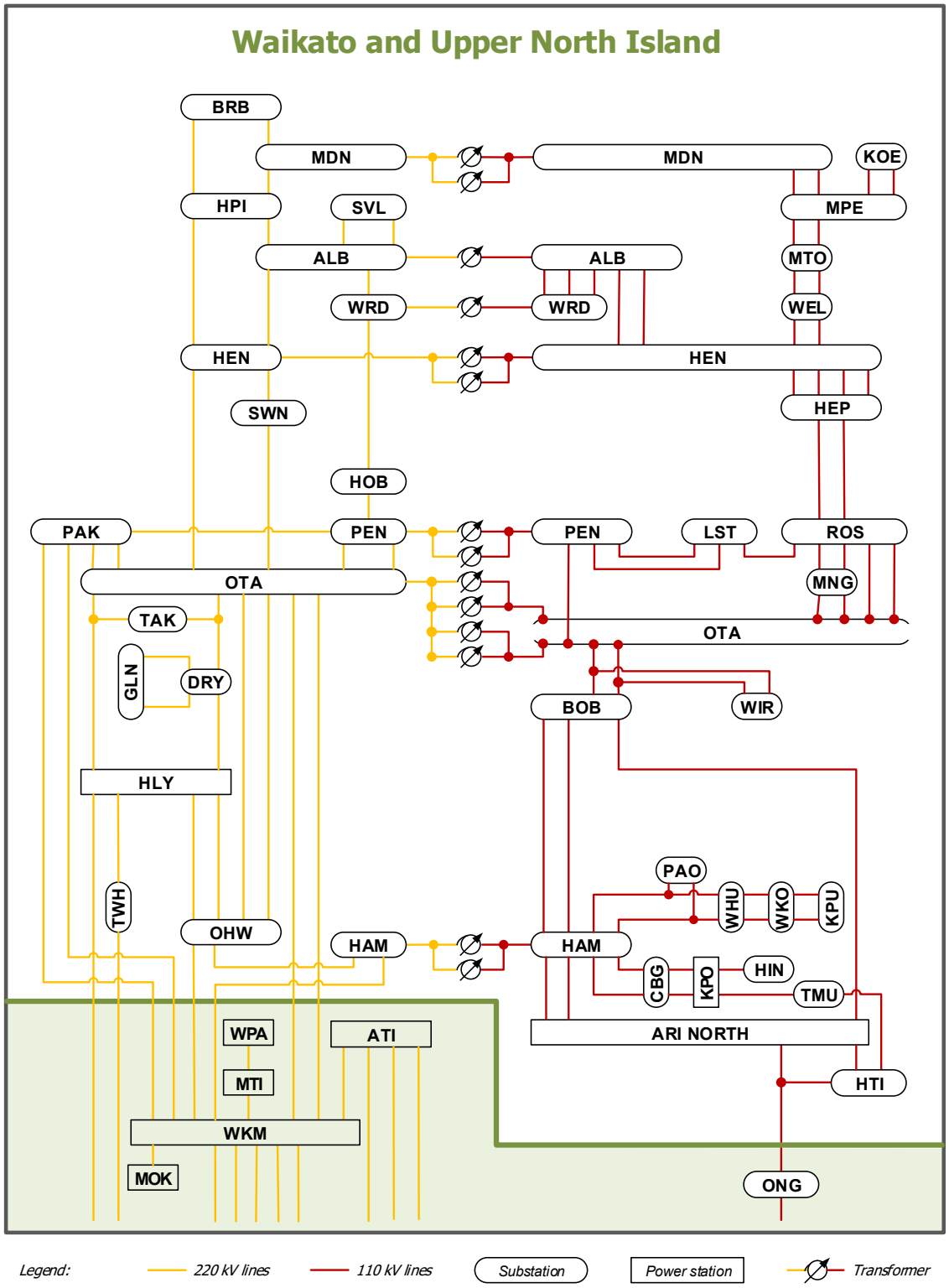

Figure 2: Illustration of Waikato and UNI transmission system (geographic)

2.2 Need

There have been actual and announced decommissionings of major generation in the WUNI region, with a reduction of over 1000 MW of generation since 2012.

This is a significant change for the New Zealand power system, especially when coupled with the actual and forecast demand growth in the WUNI region. Transpower conducted a number of analyses in late 2015 and early 2016[11], and identified issues with both voltage management and thermal transfer into the WUNI region[12].

The voltage management issues have been investigated as the Waikato and Upper North Island Voltage Management (WUNIVM) Investigation. Our analysis indicates that the power system will not be able to supply the forecast peak WUNI load, and avoid over-voltage conditions, from winter 2024 under a prudent forecast even with two Rankine units available to provide active and reactive power under a specific N-1 fault[13]. Once the Rankine units retire, this will result in an even larger gap between the load forecast and the WUNI load limits. Under an expected (P50) forecast the gap is about 200 MW in 2023 and increasing. This over-voltage need must be met before winter 2023. Similarly, the over-voltage N-G-1 limit is forecast to be exceeded from winter 2021 with the Rankines available under a prudent forecast.

Intertwined with this over-voltage stability issue is a risk of post-fault transient under-voltage. While the N-1 under-voltage limit is higher than the N-1 over-voltage limit, if the Rankine units retire in 2022 it too is forecast to be exceeded in 2023 under a prudent forecast (and exceeded in 2025 under an expected forecast).

These limits and the prudent and expected forecasts are shown in Figure 3 below.

[11] See www.transpower.co.nz/upper-north-island-generation-decommissioning-report-and-appendices and www.systemoperator.co.nz/activites/current-projects/impact-thermal-generator-decommissioning.

[12] Investigation has determined that the preferred option to voltage management would also have thermal transfer benefits, that would push any remaining thermal need out to the mid-2020s. The term 'thermal' is used here to describe transmission limits to power transfer, called thermal because the limit is related to the temperature of the conductors. Not to be confused with the term 'thermal decommissioning', called thermal because it is related to gas and coal fired generation.

[13] Our voltage stability limits are based on a two-phase to ground fault for transmission circuit faults, and single-phase to ground faults on generation units and dynamic reactive devices.

Figure 3: Voltage stability limits and peak demand forecasts

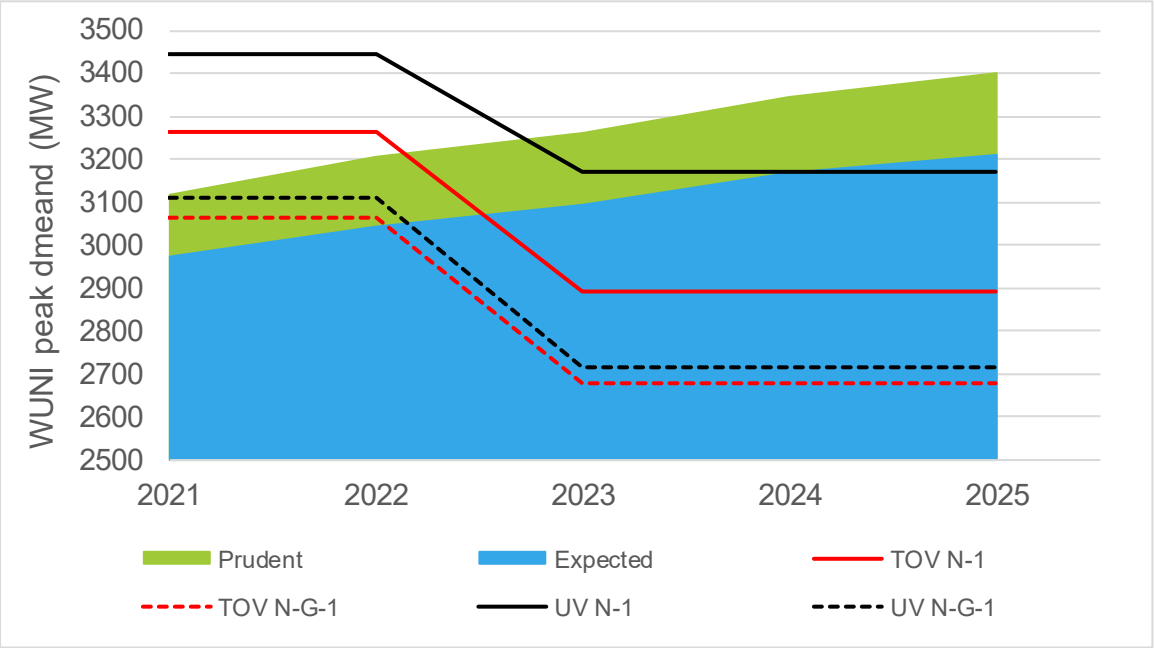

The need to invest for voltage support in the WUNI region is driven by four factors:

- voltage stability – both under- and over-voltage
- future load growth in the WUNI region
- thermal decommissioning
- good electricity industry practice.

Under-voltage

Maintaining voltage stability requires preventing the voltage falling too low. Under-voltage issues are expected to arise in the WUNI region as load increases and the remaining Huntly Rankine generation is decommissioned.

The power system has long relied on generation in the Auckland area and at Huntly for voltage support. Following the proposed retirement of the remaining two 250 MW units, we need to replace the voltage support that these units provide. Given current information that these units may retire by the end of 2022, the need date for investment to manage under-voltage issues is ahead of winter 2023. This project timeline, allowing for regulatory approval, procurement, detailed design, build and commissioning, is tight.

The under-voltage stability limits identified from static and dynamic modelling are used to inform WUNI load limits to avoid voltage instability. If the Huntly Rankine units retire in 2022, load growth[14] in the region may result in under-voltage risk from winter 2023, rising with continued demand growth. As these are voltage stability limits, the consequence of exceeding them could be severe, with the strong possibility of widespread voltage collapse

[14] Under prudent load growth assumptions and the N-1 security standard.

of the grid should particular faults occur, resulting in an extensive blackout and the need to systematically 'black start' the grid. While these faults have a low probability, the very high economic consequences of a widespread blackout are such that there is a need for investment to mitigate this risk.

Over-voltage

Maintaining voltage stability also requires preventing the voltage rising too high. At peak load levels in the WUNI region we found significant transient over-voltage can occur following a severe fault[15] that trips voltage sensitive load (such as induction motors) due to low voltages. This effect is illustrated in Figure 4 below. Normally, the rise in voltage would stabilise within an acceptable range, however during certain scenarios, the rapid rise in voltage cannot be contained leading to voltages high enough to damage connected equipment. We need to be able to manage these transient over-voltage (TOV) events to bring very high voltages rapidly back to within a safe envelope[16].

Figure 4: Transient over-voltage event

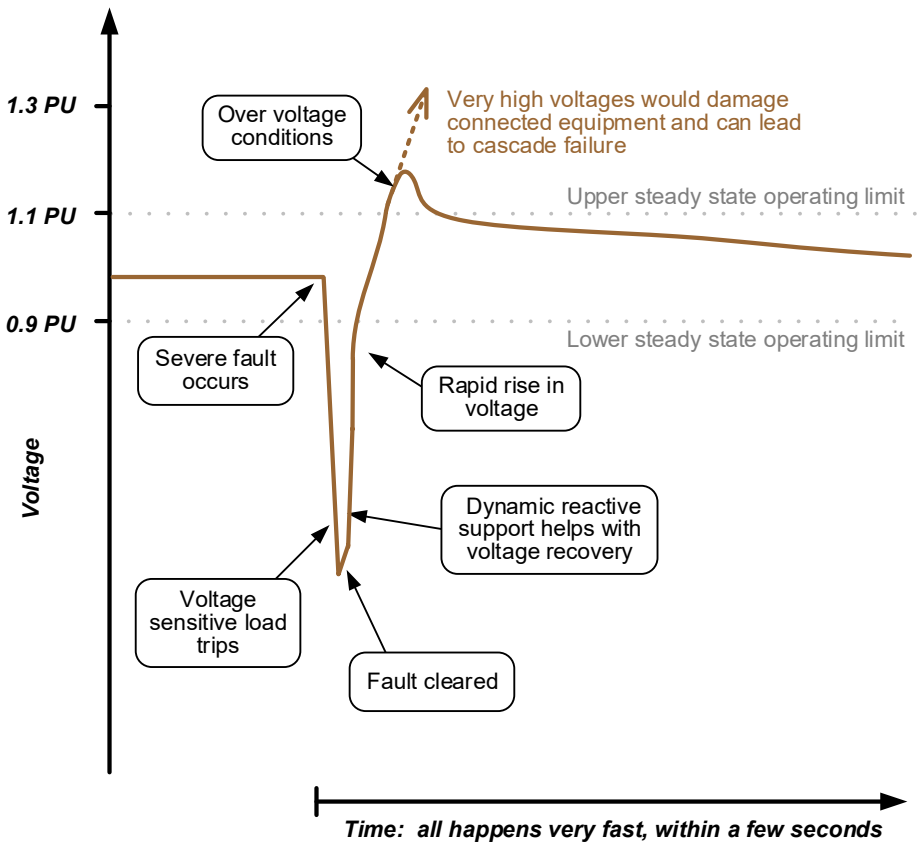

[15] Please see the Power System Analysis report for more detail on faults.

[16] Please see Appendix 2 of the Power System Analysis report.

Recent thermal decommissionings have introduced a risk of post-fault transient over-voltage. Currently, the likelihood of this risk is considered very low, and is therefore classified as an 'Other Event'[17] by the system operator. As further generation retires and demand grows the transient over-voltage risk will increase significantly. With the long lead time to commission additional dynamic reactive support, this drives an urgent need to be addressed.

To maintain voltage stability in the WUNI region, including both its under- and over-voltage dimensions, requires either:

- significant generation investment or retention at or north of Huntly.
- increased fast acting reactive support in the WUNI region.
- reduced winter peak load in the WUNI region.

Without investment to meet the need, North Island electricity consumers will be exposed to the risk of voltage collapse, or the system operator may manage pre-fault WUNI load to voltage stability limits through demand management. As the peak load continues to grow annually, without significant new generation and/or investment in reactive support, the risk of voltage collapse or quantity of demand management will increase accordingly.

For further details of the voltage stability need, please refer to the accompanying Power System Analysis report.

2.2.1 Future load growth into the Waikato and Upper North Island

Forecasting load growth is inherently difficult to do with great accuracy. It is likely to be even harder in the longer term given the potential for electrification and investment in emerging technologies.

We produced peak demand forecasts for the WUNI region by considering historical rates of growth and aligning our assumptions about emerging technologies with those in MBIE's latest EDGS published in July 2019[18]. The EDGS do not provide forecasts at a regional or GXP level. We have also updated our models to consider the latest peak demand information for the region in 2018. In 2018 peak demand in the WUNIVM region grew for the second year in a row.

We have calculated a probability distribution for future peak demand. We have done this by calculating a forecast distribution for each EDGS scenario. The distribution considers the fit of regression models to historical data and then applies the bottom-up technology uptake assumptions in each EDGS scenario. We have combined the distributions for each scenario using an equal weighting to produce an overall peak demand forecast distribution. Figure 5 shows this combined demand forecast (presented as a distribution).

[17] 'Other Events' are events that are not managed pre- or post-fault, rather they rely on post-event restoration – as defined in the system operator's Policy Statement. See www.transpower.co.nz/policy-statement.

[18] MBIE's Electricity Demand and Generation Scenarios are published here: mbie.govt.nz/building-and-energy/energy-and-natural-resources/energy-statistics-and-modelling/energy-modelling/electricity-demand-and-generation-scenarios/

We use the prudent forecast from this combined distribution for determining the need date of components. For grid planning purposes, a prudent peak forecast is used to ensure security of supply. This prudent forecast is based on the 10th highest half-hour from the 90th percentile of our peak demand forecast distribution. We use the 10th highest peak as WUNI demand is relatively 'peaky' – we consider the use of the 10th highest peak to determine need dates to be a more balanced trade-off between the risk of high demand and the economic cost of investment.

To ensure our proposal is robust to this demand forecast uncertainty, we have assessed unserved energy costs across a full distribution of demand.

Figure 5: Distribution of WUNI peak demand forecasts (2019)

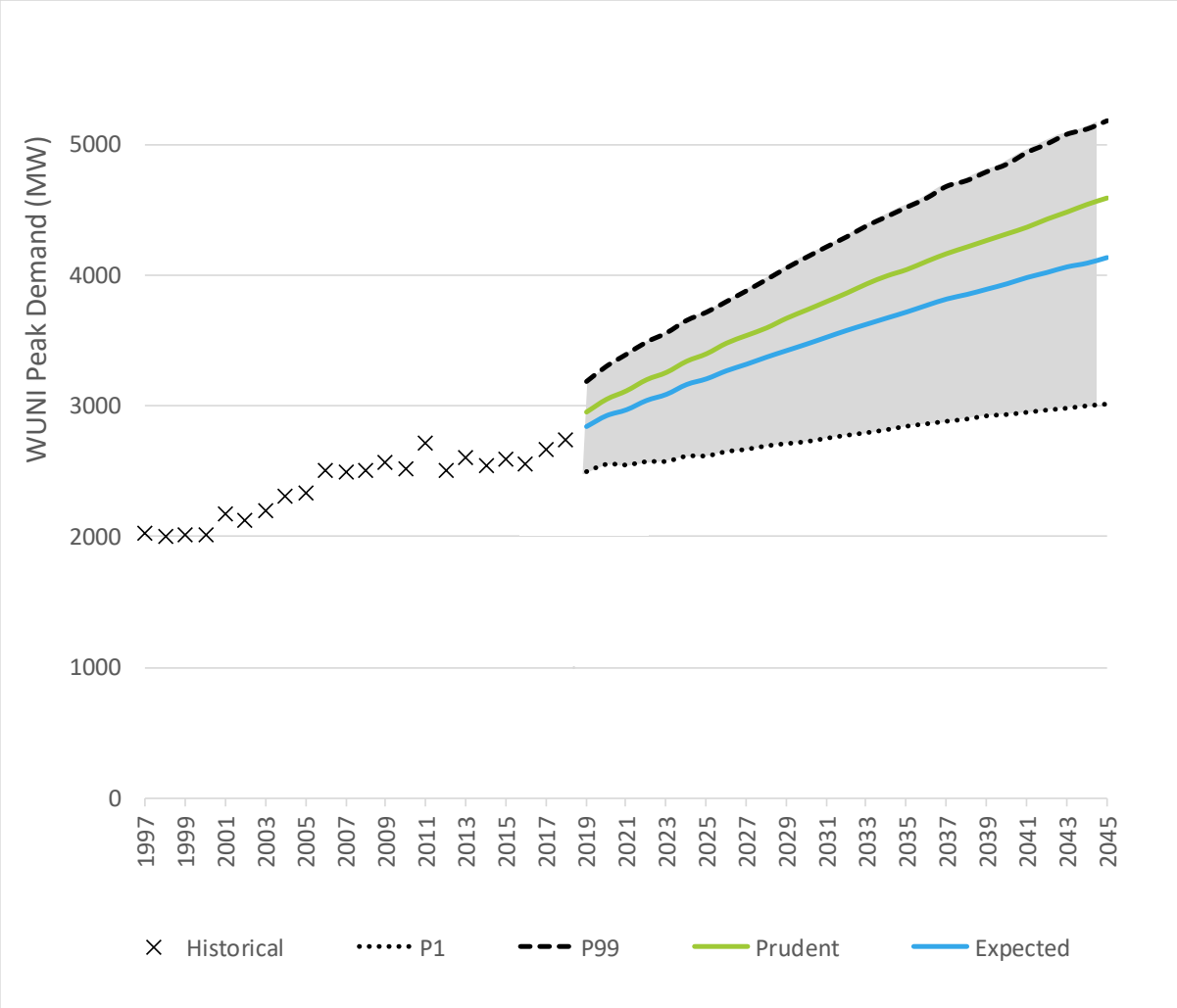

2.2.2 Thermal decommissioning

Exacerbating the voltage stability issues caused by future load growth are the actual and proposed decommissioning of major generation plants in the WUNI region which include:

- 500 MW Huntly Rankine units (two 250 MW units ceased generation prior to 2015).
- 400 MW Otahuhu combined cycle unit (ceased generation in September 2015).
- 175 MW Southdown generation station (ceased generation in December 2015).
- 500 MW Huntly Rankine units (remaining two units announced to be retired, possibly as soon as end of 2022).

The loss of this quantity of generation significantly alters the operation of the power system. Transpower's analyses since late 2015 have identified issues with both voltage management within WUNI, and thermal transfer into the region[19]. The options described in this document focus on the voltage management issues, the principal need being the maintenance of voltage stability in the WUNI region.

The possibility of deferred retirement of the Huntly Rankine units and/or new generation investment in the region is considered in Section 2.3.2 below.

2.2.3 Grid reliability standards and good electricity industry practice

We have ensured that the planning and performance standards used to determine our short-list reflect Good Electricity Industry Practice (GEIP). The Capex IM requires Transpower to reflect Good Electricity Industry Practice and defines it as specified in the Code as:

> "the exercise of that degree of skill, diligence, prudence, foresight and economic management, as determined by reference to good international practice, which would reasonably be expected from a skilled and experienced asset owner engaged in the management of a transmission network under conditions comparable to those applicable to the grid consistent with applicable law, safety and environmental protection. The determination is to take into account factors such as the relative size, duty, age and technological status of the relevant transmission network and the applicable law."

Accordingly, comparable international practice should be considered in assessing what is GEIP in terms of grid investment planning. We can reasonably be expected to adopt solutions consistent with good international practice.

We have engaged external consultants to provide technical advice to our power system modelling team throughout the project.

- Zia Emin (Chairman of CIGRE Study Committee on System Technical Performance) reviewed our analysis of the over-voltage need – we modified our modelling approach to align with his recommendations.

[19] We intend to investigate thermal transmission constraints through a separate investigation.

- GHD reviewed our planning criteria and found them to be consistent with our international peers and good electricity industry practice.

As such, we consider our assessment of the need is consistent with international practice and is reasonable and prudent given the importance of maintaining voltage stability in the WUNI region.

We have also ensured that reliability and quality of supply are maintained as required by the Grid Reliability Standards (GRS) prescribed by the Code (schedule 12.2).

2.3 Market generation announcements

There is a level of uncertainty about New Zealand's energy future not previously experienced. Policies, available technologies, electricity demand, supply, storage and transmission systems are all set to change, potentially significantly by 2035. These changes will impact this project, particularly the long-term asset investments required to address the voltage stability need.

There is a reasonable chance that market generation commitments will be made during this project. In submissions to both our WUNIVM long and short-list consultations there was a widespread view that, in the short to medium term, significant new market generation in the WUNI region appeared unlikely. Nevertheless, we are aware of some considerations being given to such investment. Besides new generation announcements, there is also the chance of further generation decommissioning or changes to generation operating availability.

Given the uncertainty in the generation market, our preferred option needs to be robust to changing generation futures. However, due to the long lead times required to commission transmission equipment, it is also essential this investigation proceed at pace despite the uncertain market conditions. This application is proceeding on the basis of the Rankine units being retired at the end of 2022, without replacement, as no commitment has been made otherwise.

If a significant generation commitment – whether to Rankine life extension or to new generation – were made then we would either amend our MCP or, if necessary, seek an amendment to the approved project to reflect any revised preferred option.

2.3.1 New generation at Huntly or north

The voltage stability need is highly geographically dependent, with the value of additional generation rapidly waning when away from specific WUNI locations. Any new generation south of Huntly will not significantly help to meet the voltage stability need, but generation at Huntly or north would.

Any new capacity, however, is unlikely to be of a sufficient size to materially defer the need created by rapid load growth and recent thermal decommissioning. To significantly alter the quantum of the need, generation would need to be enough to:

- compensate for the loss of the remaining 500 MW of Rankine units and the forecast load growth, and
- be operable at winter peaks irrespective of the hydrological situation (i.e. not just operating during a dry winter).

We are not aware of any committed generation projects in the WUNI region other than the 27 MW expansion of the Ngawha geothermal station and the 20 MW expansion of the Karapiro hydro station. Both of these investments are included in our economic analysis.

2.3.2 Retention of Huntly Rankine units beyond 2022

The generation landscape in the WUNI region has not materially changed since April 2016 when Genesis Energy announced[20] its plans to decommission two 250 MW units (the Rankine units) at the end of 2022. There have been no firm commitments to new generation or to the retirement of existing generation at, or north of, Huntly.

Genesis Energy announced[21] in February 2018 that it will stop using coal to generate electricity except in exceptional circumstances by 2025, and it will stop using coal entirely by 2030. This is not a commitment to retaining the Rankine units past 2022 but does imply that they could extend their life as coal plant until 2025, and as gas plant for normal market operations beyond that.

It is possible that Genesis Energy will make a firm commitment to the Rankine units' retirement, extension or replacement following this MCP submission. However, given forecast demand growth, there is a need for dynamic voltage support before winter 2024 even if the Rankine units remain in service.

2.3.3 Early and additional generation decommissioning

Retirement of the remaining Rankine units prior to 2022 due to plant failure or economic drivers is possible but considered unlikely. Another event that could occur is a major failure or outage of the 400 MW Huntly unit 5. We will mitigate this risk by planning to commission the required stage 1 components as soon as possible following approval, and by seeking suitable non-transmission solutions that could be contracted under a voltage support grid support contract (where economic relative to the risk). Even then, the earliest that major transmission equipment could be commissioned is expected to be late 2022.

Operationally (without other risk mitigation from Transpower as the grid owner) the system operator would classify the voltage stability risk as either a 'Contingent Event' (CE),

[20] Genesis Energy Limited – Rankine units operational life extended, Genesis Energy, 28 April 2016, https://gesakentico.blob.core.windows.net/sitecontent/genesis/media/new-library-(dec-2017)/about_us/investor/pdfs/2016/investor_market_announcement_5-genesis-energy-rankine-units-operational-life-extended-28-april-2016.pdf

[21] Genesis establishes a pathway to a coal-free electricity future, Genesis Energy, 14 February 2018, https://gesakentico.blob.core.windows.net/sitecontent/genesis/media/new-library-(dec-2017)/about_us/investor/pdfs/genesis-establishes-a-pathway-to-a-coal-free-electricity-future.pdf

'Extended Contingent Event' (ECE), or 'Other Event' in accordance with the credible event methodology[22], based on the most up to date information at the time. The system operator would arrange mitigations in accordance with those allowed under the policy statement and available to it at the time.

2.4 Electricity demand and generation scenarios

MBIE recently updated its EDGS, which we have incorporated into our assessment of the need and short-list options. There are five generation and demand scenarios in the EDGS which we have used in our analysis:

- Reference: current trends continue
- Growth: accelerated economic growth
- Global: international economic changes
- Environmental: sustainable transition
- Disruptive: improved technologies are developed

The EDGS do not specify a probability or weighting for these scenarios. We have given each scenario an equal weighting in our base case assessment.

The EDGS do not specify generation or demand at the level of granularity required for our analysis. Therefore, we could not apply the EDGS without some interpretation and disaggregation of the scenarios:

- The EDGS do not generally specify the specific location of new generation plant other than relating to the North or South Island. These expansion scenarios are not sufficiently granular to be incorporated within our analysis, which requires a forecast of expansion within the WUNI region. Therefore, we have assumed generation expansion in the WUNI region is consistent with that used in our short-list consultation.
- The EDGS forecast electricity demand for the North and South Islands. We have disaggregated these forecasts into regional demand forecasts using our forecasts of demand at each GXP. This methodology scales GXP and regional forecasts to reconcile these with the island forecasts from the EDGS.
- The EDGS have some limited information on peak demand at an island level in a single year (2050). This is not sufficient to use in our analysis as we require annual peak demand. We have a well-developed and robust methodology for forecasting peak demand based on historical data, which we have used as the basis for our top-down peak demand forecasts. However, we have applied the bottom-up forecasts of

[22] transpower.co.nz/system-operator/operational-information/event-categorisation

technology uptake from the EDGS to our top-down forecasts, which have the effect of changing our forecasts based on the effect of these technologies on peak demand.

Furthermore, we have made some reasonable variations to the EDGS:

- The EDGS assume the Huntly Rankine units do not begin reducing their capability until 2030 and 2031[23]. As described in the preceding sections, we assume the Rankines are decommissioned by the end of 2022. We have received no information to the contrary through our consultation process, and respondents to our short-list consultation were generally supportive of us proceeding under this assumption unless we receive such information. We consider this a reasonable variation on the EDGS given the significant risk of voltage collapse if the units retire and we do not invest in voltage support.
- We made some minor variations to the timing of new generation plant specified in the EDGS in order to apply the EDGS in our generation dispatch model. Without these variations, the model would produce unrealistic patterns of generation dispatch.

A detailed description of the demand and generation scenarios we have used in our analysis is in Section 4.1.1 of the Options and Costing report.

3 Identification and assessment of options

We consulted on our draft long-list of components in 2016. Since then, we have further developed our long list – specifically, to include additional components that help us manage the over-voltage need.

Our short-listed components, and the options we have developed to meet the need were consulted on in June 2019. Most submitters were generally supportive of our intended approach to determining a preferred option[24].

3.1 Refinement since short-list consultation

In June 2019 we released our short-list consultation, and with it we released an Options and Costings report. Since that time, we have considered feedback on our short-list consultation and continued to work on our analysis. This has resulted in us refining some of our work. Since our short-list consultation we have:

- undertaken additional analysis to derive load limits associated with the over-voltage risk (described in our Power Systems Analysis report). This has allowed us to include the over-voltage risk in our calculation of unserved energy benefits (described in the Options and Costing report).

[23] The EDGS assume the units remain fully operational until 2030 and 2031, then run at restricted capacity solely on gas until 2034.

[24] Refer to Attachment D – summary of submissions.

- added two options to our short-list to more clearly show how each option delivers different voltage stability limits and therefore benefits to electricity consumers.
- incorporated the new Electricity Demand and Generation Scenarios (EDGS) published by the Ministry of Business, Innovation and Employment (MBIE) in July 2019 into our analysis. As part of this process we also updated our models to reflect 2018 actual peak demand. This increased our forecast and brought forward the need date of components into our immediate investment horizon. In response, we have also shortened our immediate investment horizon to the period 2023-2024 (inclusive).
- removed TSRs from the short list[25] – we consider the analysis in the short-list consultation sufficient to demonstrate that TSRs have a significantly greater cost than other equivalent dynamic reactive devices. We have excluded them because including them would require significant additional analysis for little benefit.
- refined the capital and O&M costs of short-list components.
- reviewed and modified our fault rate and asset availability assumptions in response to submissions made to the short-list consultation.
- assumed pre-fault demand management is only used in our NTS option (in order to provide greater clarity of how we have calculated unserved energy costs and to better demonstrate the costs and value of demand management).

3.2 The options

3.2.1 Long-list of options

We prepared a long-list of components which could support voltage stability prior to the WUNIVM long-list consultation. Following submissions on our long-list and further analysis into the voltage stability need, the long-list of components evolved to include additional items.

The long list of options fell into 5 broad categories:

- Reactive power devices
- Other transmission assets
- System operations
- Market generation
- Demand-side participation (including embedded generation).

For further detail of the long-list of options please refer to the Options and Costing report.

[25] Option 6 in our short-list consultation used thyristor switched reactors (TSRs) and series capacitors instead of SVCs to manage voltage stability during the immediate investment horizon providing similar benefits as SVCs but at a significantly greater cost.

3.2.2 The short-list

Creating a short-list of options required not only selection from the long-list of components, but also identification of the quantity and size of components required to address the voltage stability need.

To streamline the preparation of options, we grouped components from the long-list that provide equivalent support into 'building blocks', effectively a short-list of representative components. This process is described in greater detail in our Options and Costing report.

Within our analysis we have taken the following modelling approach:

- Dynamic reactive support that can provide both over- and under-voltage support is modelled using an SVC as a generic device to provide a representation of the necessary dynamic response required. All SVC building blocks are modelled in ±150 Mvar blocks.
- Static reactive support is modelled using shunt capacitors to provide a representation of the necessary static voltage response. They are modelled using a minimum of 75 Mvar blocks.
- Series capacitors are modelled with a 45% compensation on the Brownhill–Whakamaru (BHL–WKM) circuits.

3.2.2.1 Short-listed components

We identified the following short-listed component 'building blocks' that we have modelled within our options. These components are used throughout the world to manage voltage stability issues as identified in our investment need. Furthermore, we have followed good international practice by exploring alternatives to these transmission components, such as non-transmission solutions. The components are described in detail in the Options and Costing report.

- **Shunt capacitors:** Shunt capacitors are the lowest cost means of providing reactive support. They can help prevent a slow voltage collapse by supporting the voltage level pre-fault and allowing a sufficient margin for dynamic reactive devices to react to transient events.
- **Demand management scheme:** A post-fault demand management scheme in the WUNI region would cover for the risk of specific high impact low probability faults. These schemes can be an alternative to investing in transmission equipment to mitigate voltage stability risks.
- **Series capacitors:** Series capacitors reduce the impedance (electrical length) of a transmission line, increase power transfer capability and improve system stability. Series capacitors on the Brownhill–Whakamaru circuits would help by diverting power transfer away from highly loaded parallel circuits, reducing transmission losses.
- **Dynamic reactive devices (SVCs):** Dynamic reactive devices can inject or absorb variable amounts of reactive power in a few milliseconds. Common examples are static var compensators (SVCs), static synchronous compensators (STATCOMs) and

synchronous condensers. During our analysis and throughout this document we use SVCs to represent a generic dynamic reactive device.

- **Non-transmission solutions (NTS):** Many reactive devices are available as transmission assets which Transpower could build and own. However, these and other components may be available as NTSs that Transpower could contract for through a voltage support grid support contract (GSC)[26]. Pre-fault demand management is another possible NTS. NTSs are modelled in our options by their ability to defer or avoid transmission capital investment in reactive support devices.

We anticipate that the duration of the works required for these components, from the decision to proceed following investigation including conceptual design but prior to preparation of tender documents would be:

- Shunt capacitors: 24 months
- Series capacitors: 33 months
- Dynamic reactive devices: 30 months
- Post-fault demand management scheme: 18 months+
- NTS: dependent on the details of any reliable and economic NTS offers.

These are indicative planning times and may need to be adjusted for resource availability, build seasons and a risk allowance.

3.2.2.2 Modelled transmission projects

Under the Capex IM each option is considered in the context of a longer-term grid development path comprised of 'modelled projects'. The modelled projects are future new assets or changes to existing assets which are not part of the option proposed, but could affect or impact the options and the choice of the preferred option. In our analysis any components contained in an option beyond the immediate investment horizon are considered modelled projects.

With further demand growth we will reach thermal transmission capacity limits for transfer into the UNI. When this limit is reached, we would then need to augment the grid to increase capacity between Whakamaru and Auckland. We have assumed the use of various modelled projects to address the thermal capacity needs. Addressing the thermal needs will be investigated further in future proposals aimed at addressing those needs.

In the following sections we describe our options within our immediate investment horizon only: please refer to our Options and Costing report for our assumptions on modelled projects.

[26] Information on the design features of Transpower's grid support contracts (GSCs) is available at www.transpower.co.nz/grid-support-contracts.

3.2.2.3 Security standards

In addition to selecting components to meet the need, each option is designed to maintain a level of reliability during the immediate investment horizon under a prudent demand forecast.

The Grid Reliability Standards require us to maintain at least an N-1 level of reliability on the core grid, which means the power system remains in a stable state without a loss of supply to demand following a failure of a single transmission circuit or generation unit. However, we can invest to maintain a higher level of reliability if we can justify this higher level through the Investment Test. For this investigation, there are four security standards that we test to determine the economically optimal level of reliability over the immediate investment horizon:

- **N-G-1**: under this standard we would invest in primary equipment to cover an outage of the largest regional generator Huntly unit 5 ('G') (or an equivalent transmission asset) and a fault of any single circuit in the WUNI region. This standard results in the lowest level of unserved energy of the options assessed in this investigation.
- **N-G-1 (with demand management):** under this standard we would invest in primary equipment to cover an outage of Huntly unit 5 ('G') (or an equivalent transmission asset) and a fault of Otahuhu–Whakamaru 1 or 2 or another circuit with equivalent, or less severe, voltage stability demand limits. A post-fault demand management scheme in the WUNI region would cover the risk of specific high impact low probability faults.
- **N-1:** under this standard we would invest in primary equipment to cover a fault of any single circuit, generator, or transmission component on the core grid in the WUNI region.
- **N:** while this standard does not meet the deterministic clause of the Grid Reliability Standards, we have included two options that do not maintain N-1 security under a prudent forecast to demonstrate the economic benefits of the other options.

When developing our options for the immediate investment horizon, we have added components to ensure our prudent peak demand forecast remains below the voltage stability limit associated with the standard selected for that option. These limits increase as components are commissioned. We have selected the commissioning date (i.e. need date) of components based on our 2019 prudent demand forecast.

3.2.3 Short-list options

This section summarises our seven short-list options.

Defer investment to 2028 - This option has no capital investment until the end of 2028 and therefore has a high risk of unserved energy. This option does not meet the deterministic arm of the GRS and we do not consider the option to be good electricity industry practice, but we have included it to demonstrate the economic benefits of the other options.

Option 1 – This option represents possible non-transmission solutions that may allow us to defer or avoid the need for voltage support investment. In this analysis, we assume the NTS is pre-fault demand management, providing N-G-1 security.

Option 2 – Containing a combination of two SVCs, a post-fault demand management scheme, and series capacitors in 2022, this option provides N-G-1 security (with demand management) during the immediate investment horizon.

The post-fault demand management scheme is an emergency risk mitigation measure designed to allow the power system to continue operating without pre-fault demand management during a long-term unplanned outage of Huntly unit 5 or a critical transmission component.

Option 3 – A combination of two SVCs and a post-fault demand management scheme[27] in 2022, and series capacitors in 2023. This option provides firm N-1 security during the immediate investment horizon.

Option 4 – This option contains the greatest upfront capital investment with three SVCs, series capacitors, and shunt capacitors in 2022, and an additional SVC and shunt capacitors in 2023. This option provides the highest level of security assessed in this investigation: N-G-1 without the use of a post-fault demand management scheme.

Option 5 – This option tests the costs and benefits of providing N-1 security without the series capacitors. As a result, the option utilises a different modelled thermal project than option 2, 3, and 4 to alleviate future thermal constraints. We expect the alternative reconfiguration (OHW Bussing[28]) to be more expensive than other possible thermal investments (e.g. OHW Tee[28]) because it requires duplexing of the Otahuhu–Whakamaru 1 and 2 conductors.

Option 6 – This option only invests in two SVCs during the immediate investment horizon but is included to show the benefits of other options. Like the defer investment option, this option does not meet the deterministic arm of the GRS and we do not consider the option to be good electricity industry practice, but we have included it to demonstrate the economic benefits of the other options.

Further detail of each option is presented in the Options and Costing report. For the purposes of our economic analysis, we assume the components in each stage are commissioned at the end of the year prior to the need date.

[27] In addition to the firm N-1 security provided by the SVCs, we utilize the post-fault demand management scheme to cover a subset of specific, long-duration N-G-1 contingencies outages that could occur on the grid (e.g. Huntly unit 5, or a BHL-PAK cable outage). We consider it prudent to guard against these long-duration contingencies even in options such as this that do not cover other N-G-1 contingencies, and therefore only provide firm N-1 security.

[28] These reconfigurations are described in the Options and Costing report.

Table 3 - Options with components by commissioning year

Commissioning year	Defer investment	Option 1 - NTS	Option 2	Option 3	Option 4	Option 5	Option 6
Security standard	N	N-G-1	N-G-1 (with demand mgmt.)	N-1	N-G-1	N-1	N
Stage 1 component 1 (2022)		Pre-fault demand management as NTS	Post-fault demand management scheme	Post-fault demand management scheme	± 150 Mvar SVC at HAM 110	Post-fault demand management scheme	Post-fault demand management scheme
Stage 1 component 2 (2022)			± 150 Mvar SVC at HAM 110	± 150 Mvar SVC at HAM 110	± 150 Mvar SVC at OTA 220	± 150 Mvar SVC at HAM 110	± 150 Mvar SVC at HAM 110
Stage 1 component 3 (2022)			± 150 Mvar SVC at OTA 220	± 150 Mvar SVC at OTA 220	Series capacitors with 45% compensation on BHL–WKM 1&2	± 150 Mvar SVC at OTA 220	± 150 Mvar SVC at OTA 220
Stage 1 component 4 (2022)			Series capacitors with 45% compensation on BHL–WKM 1&2		± 150 Mvar SVC		
Stage 1 component 5 (2022)					150 Mvar Shunt capacitors		
Stage 2 component 1 (2023)				Series capacitors with 45% compensation on BHL–WKM 1&2	± 150 Mvar SVC	± 150 Mvar SVC	
Stage 2 component 2 (2023)					75 Mvar Shunt capacitors	150 Mvar Shunt capacitors	
Modelled components	(SVCs, OHW Bussing)	(SVCs, OHW Bussing)	(SVCs, OHW Tee)	(SVCs, OHW Tee)	(SVCs, OHW Tee)	(SVCs, OHW Bussing)	(SVCs, OHW Bussing)

3.3 Costs and benefits

We have assessed the following costs and benefits of each short-listed option. These are described in detail in the Options and Costing report.

- Stage 1 and stage 2 capital and O&M costs
- Unserved energy benefits
- Future modelled project capital costs
- Transmission loss benefits

We also assessed generation dispatch benefits using the hydro-thermal dispatch optimisation package called SDDP. We found these benefits to be negligible as generation that could be constrained-on if demand exceeded voltage stability limits was forecast to already be running during peak periods. We have included the competition benefits from increased voltage capacity as an unquantified benefit.

3.3.1 Economic assumptions

The assumptions used in this analysis are consistent with both our long and short-list consultation and supported by stakeholder submissions. For more information, see Section 4 of the Options and Costing report.

- We have used a 7% pre-tax real discount rate as outlined in the Capex IM. Unless otherwise stated, all costs and benefits throughout this document have been discounted at this rate to 2019 dollars.
- Our generation assumptions are reasonable variations of MBIE's 2019 EDGS[29].
- When calculating the economic cost of an interruption to electricity supply in the WUNI region we have used a Value of Lost Load (VoLL) equal to $26,500/MWh. This number is based on the value specified in the Code defined as $20,000/MWh in 2004 inflated at CPI to 2019 dollars.
- We assume pre-fault demand management costs $2,000/MWh, based on prices observed through our demand response programme.
- Long run marginal cost of energy generation of $80/MWh.
- Calculation period: 2023-2045. We proposed this calculation period during our long-list consultation as – at the time – we considered it possible that components commissioned as late as 2025 might be included in the proposal. Despite this not being the case, we have retained the assumption to be consistent with the long-list consultation.

[29] As prepared by the Ministry of Business, Innovation and Employment (MBIE).

3.4 Application of the Investment Test

Table 4 summarises the results of our quantified assessments of options. We present the net-benefit of the options relative to the defer investment option.

Table 4: Net-benefit test (present value 2019 $m)

	Defer invest-ment	Option 1	Option 2	Option 3	Option 4	Option 5	Option 6
Security standard	N	(N-G-1)	(N-G-1 with demand mgmt.)	N-1	N-G-1	N-1	N
Stage 1 capital cost	$0	$0	$174	$96	$219	$96	$96
Stage 2 capital cost	$0	$0	$0	$72	$47	$48	$0
Stage 1&2 O&M	$0	$782	$20	$19	$30	$16	$11
Total cost (A)	**$0**	**$782**	**$193**	**$188**	**$295**	**$161**	**$107**
Unserved energy benefits	$0	$200	$174	$172	$192	$170	$127
Reduction in future modelled project capital cost	$0	-$84	$142	$142	$164	$62	$42
Transmission loss benefits	$0	$0	$32	$30	$32	$0	$0
Total benefits (B)	**$0**	**$116**	**$348**	**$343**	**$389**	**$232**	**$169**
Net benefit (B-A)	**$0**	**-$666**	**$155**	**$155**	**$94**	**$72**	**$62**

Option 2 and option 3 have the highest net-benefit. The higher unserved energy and transmission loss benefits of option 2 are similar to option 2's marginally higher capital cost from commissioning the series capacitors a year earlier than option 3.

The option with the highest level of security – option 4 – has a significantly lower net-benefit than options 2 and 3, indicating the additional cost of moving from a lower level of security to full N-G-1 is greater than the benefit.

Option 5 provides N-1 security but has a lower net-benefit than options 2 and 3 because it does not use the series capacitors and therefore requires a higher capital cost thermal development path. This development path has a higher cost because it requires duplexing OTA-WKM-1 and 2, whereas the base case development path only requires a like-for-like reconducting of these circuits. In addition, it does not have any transmission loss benefits as it does not include the series capacitors.

The two options that do not meet the GRS during the immediate investment horizon (defer investment and option 6) have lower net-benefits than options 2 and 3. This supports the deterministic arm of the GRS, which requires a minimum of N-1 security on the core grid.

Option 1 has a large negative net-benefit, indicating the cost of such a significant quantity of demand management is prohibitive.

3.4.1 Sensitivity analysis

Table 5 shows our sensitivity analysis of key economic variables and modelling assumptions. The option with the highest net-benefit and options with a difference in net-benefit that is within 10% of the project cost of this option are coloured green.

Table 5: Sensitivity analysis (net-benefit, 2019 $m)

	Defer invest-ment	Option 1	Option 2	Option 3	Option 4	Option 5	Option 6
Base case	$0	-$666	**$155**	**$155**	$94	$72	$62
Discount rate 4%	$0	-$842	**$229**	**$227**	$178	$122	$99
Discount rate 10%	$0	-$535	**$102**	**$104**	$38	$36	$36
Upper range capital costs	$0	-$666	**$72**	**$75**	-$40	$5	$22
Lower range capital costs	$0	-$666	**$206**	**$205**	$175	$113	$87
EDGS Reference	$0	-$549	**$98**	**$99**	$27	$28	$34
EDGS Disruptive	$0	-$872	**$252**	**$251**	$211	$150	$111
EDGS Environmental	$0	-$680	**$174**	**$175**	$107	$75	$70
EDGS Growth	$0	-$471	**$59**	**$62**	-$21	-$14	$8
EDGS Global	$0	-$579	**$90**	**$93**	$24	$24	$34
+50% VoLL	$0	-$566	**$241**	**$240**	$188	$155	$124
-50% VoLL	$0	-$792	**$59**	**$61**	-$20	-$21	-$4
95% HLY U5 availability	$0	-$644	**$115**	**$116**	$43	$35	$37
85% HLY U5 availability	$0	-$699	**$194**	**$194**	$138	$108	$89
+100% probability of voltage contingency	$0	-$470	**$325**	**$323**	$281	$239	$186
-50% probability of voltage contingency	$0	-$792	**$59**	**$61**	-$20	-$21	-$4
2030 Rankine retirement	**$0**	-$204	-$52	-$49	-$124	-$76	-$23
+50% LRMC of losses	$0	-$666	**$171**	**$170**	$110	$72	$62
-50% LRMC of losses	$0	-$666	**$139**	**$140**	$78	$72	$62
High capital cost range of thermal modelled projects	$0	-$666	**$103**	**$104**	$42	$72	$62

	Defer invest-ment	Option 1	Option 2	Option 3	Option 4	Option 5	Option 6
+75 MW increase in capability of additional short-list DRDs[30]	$0	-$666	**$155**	**$155**	$102	$89	$62
-75 MW increase in capability of additional short-list DRDs	$0	-$666	**$155**	**$155**	$79	$48	$62
+50 MW increase from modelled DRDs	$0	-$583	**$135**	**$136**	$67	$53	$49
-50 MW increase from modelled DRDs	$0	-$971	**$195**	**$195**	$138	$110	$93
+50% duration of outage	$0	-$566	**$241**	**$240**	$188	$155	$124
-50% duration of outage	$0	-$792	**$59**	**$61**	-$20	-$21	-$4

The sensitivity analysis shows options 2 and 3 have the highest net-benefit in all sensitivity scenarios except the deferral of the Huntly Rankine retirement. Therefore, we consider option 2 and option 3 to be robust to uncertainty in the key input parameters.

Option 4 with the highest level of security does not have the highest net-benefit in any scenarios and is never within 10% of options 2 and 3; strongly indicating this level of security is uneconomic.

Option 5 (without the series capacitors) is not within 10% of options 2 and 3 in any sensitivity, including the one that assumes the upper capital cost range of possible thermal enhancements following the installation of the series capacitors. This demonstrates the series capacitors are robust to a range of possible future grid configurations driven by the need to increase the thermal capacity of transmission in WUNI.

The Rankine retirement in 2030 sensitivity (instead of 2022) shows options 2-6 as having a negative net-benefit relative to the defer investment option. This sensitivity should not be interpreted as options 2-6 having a negative net-benefit relative to a true “do-nothing”, as our economic modelling allows all options to invest in additional voltage support from the end of 2028. A true do-nothing option without investment in voltage support over the full calculation period would result in options 2-6 having present value net-benefits of greater than $600m each. This sensitivity indicates that should the Rankines remain operational during winter peak periods after 2022, then it may be beneficial to defer some stage 1 or stage 2 components[31].

[30] Dynamic reactive devices

[31] Note, we have not undertaken the detailed power system modelling necessary to analyse this sensitivity to a high degree of accuracy – this is a high-level estimate of the net-benefit of each option should the Rankines remain operating during winter peak periods after 2022. Furthermore, we have not quantified the potential competition benefits of operating to the N-G-1 level of security, which may be material.

We do not have perfect foresight of market generation developments, including the retirement and operation of the Rankine units. Given this uncertainty, the potential cost of investing too early in stage 1 components (estimated to be $23m in this sensitivity)[32] should be weighed against the risk and foregone benefits from investing too late ($155m from our base case). Given these foregone benefits significantly exceed the potential cost of investing too early, we consider this trade-off to be a prudent balance between the risks of investment and unserved energy.

3.4.2 Unquantified benefits

We have also considered unquantified costs and benefits.

The Capex IM specifies that costs and benefits can be considered unquantified when they are not possible to quantify with a satisfactory level of accuracy, or when the investigation resource required for us to obtain a satisfactory level of accuracy is large relative to the size of the cost/benefit.

We have considered the following unquantified costs and benefits. A full description of these is in the Options and Costing report.

- **Environment – global**: options that provide greater transfer capability into the WUNI region rely less on thermal generation in the region to assist with voltage support and therefore have lower greenhouse gas emissions.
- **Competition benefits**: options that provide greater transfer capability into the WUNI region rely less on generation in the region to assist with voltage support, and therefore reduce the potential for market power to be exercised.
- **Unquantified unserved energy benefits**: we have not quantified all possible faults and voltage stability events, therefore options that provide greater voltage support are likely to also reduce unserved energy costs associated with these unquantified faults.
- **Operational benefits**: options that provide greater voltage support allow a longer window of time during the year to take planned transmission or generation outages, and have other operational benefits such as managing high voltages during low load periods.
- **Optionality**: options that invest less today tend to retain option value – in other words, are more economically flexible to future changes in the grid that cannot be perfectly anticipated today.

Table 6 shows our assessment of these unquantified benefits.

[32] We use the net-benefit of option 6 from the 2030 Rankine retirement scenario in this comparison as our staged approach allows us to transition to option 6 by deferring the series capacitors if the Rankine units remain operating after 2022 (and we have certainty they will remain operating).

Table 6: Unquantified assessment of benefits

	Defer invest-ment	Option 1	Option 2	Option 3	Option 4	Option 5	Option 6
	N	N-G-1	N-G-1 (with demand mgmt.)	N-1	N-G-1	N-1	N
Environment - Global	-	✓	✓	✓	✓	✓	-
Competition benefits	-	✓✓✓	✓✓	✓	✓✓✓	✓	-
Unquantified unserved energy benefits	-	✓✓✓	✓✓	✓	✓✓✓	✓	-
Operational benefits	-	✓✓✓	✓✓	✓	✓✓✓	✓	-
Optionality	✓✓✓	-[33]	✓	✓✓✓	-	✓✓✓	✓✓✓
Unquantified benefits ranking	**7**	**3=**	**3=**	**1=**	**3=**	**1=**	**6**

The unquantified competition, unserved energy, and operational benefits support options that provide a higher level of voltage support and transfer capability into the WUNI region.

Options that invest less in stage 1 tend to provide greater optionality given an uncertain generation and demand future. Given the current significant demand and generation uncertainty, particularly associated with the timing of the decommissioning of the Rankine units, we have given greater weight to optionality than other unquantified benefits. As such, we have ranked option 3 higher than option 2.

4 Selecting the investment proposal

This section presents our proposal for our preferred solution, and our approach for revising this solution – if required – following our procurement process for NTSs or due to generation commitments.

Our base-case net-benefit analysis assessed options 2 and 3 as the options with the highest net-benefit.

Our sensitivity analysis confirms options 2 and 3 have the highest net-benefit over most sensitivity scenarios.

When considering unquantified benefits, the Capex IM considers two options as being similar if the difference in their net benefits is less than 10% of the proposed capital cost of

[33] While NTS may provide optionality if used sparingly, we consider the large quantity of pre-fault demand management required would need long-term contracts, reducing potential optionality benefits.

the option with the highest net-benefit[34]. In this case, options 2 and 3 have the same net-benefit so we consider unquantified benefits.

Option 2 has significantly higher competition, operational, and unserved energy unquantified benefits than option 3 as it provides for stable voltage support into the WUNI region without relying on the single remaining major generator in the WUNI region. As a result, we conclude N-G-1 (with demand management) is our preferred long-term security standard for the WUNI region.

However, as indicated above we have given significant weight to the optionality that option 3 provides. Given the current uncertain future of the Rankine units we do not consider it economically prudent to commit considerable expenditure on the series capacitors at this time. Doing so risks commissioning the series capacitors earlier than they would be needed if the Rankine units were to stay.

If the Rankine units do retire in 2022 (or we receive no new information) and there are no other demand or generation developments, we will undertake additional consultation on the series capacitors with the intention of applying for them in a stage 2 proposal with a commissioning date before winter 2024. To reduce the lead time needed to commission the series capacitors, we are seeking approval for preparatory works for the series capacitors in this proposal. The sensitivity analysis demonstrates the need for the series capacitors is robust to uncertainty – including the range of possible thermal reconfigurations to the grid.

We will investigate the use of non-transmission solutions to help deliver N-G-1 security (with demand management) during 2023 (and as a risk mitigation measure should the Rankine units retire earlier than 2022 or demand grow unexpectedly).

Table 7 summarises our assessment of our preferred transmission solution.

Table 7: Quantitative and qualitative ranking of options

	Defer invest-ment	Option 1	Option 2	Option 3	Option 4	Option 5	Option 6
	N	N-G-1	N-G-1 (with demand mgmt.)	N-1	N-G-1	N-1	N
Net-benefit	$0	-$666	$155	$155	$94	$72	$62
Unquantified benefits ranking	7	3=	3=	1=	3=	1=	6
Overall ranking	**6**	**7**	**2**	**1**	**4**	**3**	**5**

[34] See Schedule D, Clauses (1)(c)(ii) and (2)(a) of the Capex IM.

4.1 Non-transmission solutions procurement process

In parallel to this MCP application, we are running a second request for information for non-transmission solutions (NTS) – the first request being part of the long-list consultation in 2016. We have initiated this NTS procurement process in parallel with our MCP application rather than first running an NTS procurement process, as:

- running an NTS procurement process before our MCP submission would have significantly delayed this MCP submission and hence our ability to meet the need.
- we expect that, if we ran an NTS procurement process before our MCP submission, the additional lag between contract negotiation and exercising the contracts would be unacceptable to some proponents.
- some relevant technology such as batteries are advancing rapidly, and additional time may result in a more economic solution being proposed.

Running the NTS procurement process in parallel to this MCP application ensures that any NTS can be implemented prior to the earliest need date, while still being flexible to the uncertainty of market generation announcements.

Transpower has developed design features of the grid support contracts (GSCs) that we would use for contracting with NTS proponents[35].

4.1.1 Evaluation of non-transmission solutions

Our NTS RFI closed on the 26th of November 2019. We received three responses that we are currently evaluating. Based on an initial evaluation, we do not expect these to replace or defer stage 1 components due to their size and technology. However, one or more may assist with providing a higher level of security than our preferred option and/or contribute to deferring stage 2 components.

If we determine one or more of these responses are viable, we will update our short-list options, re-apply the Investment Test, and update our proposal. We may stage NTS components separately from transmission components in order to determine firm prices through a formal procurement process before seeking approval of an MCA for NTS.

4.2 Market generation announcements

If a significant generation commitment – such as Rankine life extension or new generation – were to be made then we would either amend our MCP or, if necessary, seek an amendment to the approved project to reflect our revised preferred option.

Based on our current prudent peak demand forecast, we would require at least one dynamic reactive device before winter 2024 if the Huntly Rankine units remain in-service, with another

[35] Information on the design features of Transpower's grid support contracts (GSCs) is available at www.transpower.co.nz/grid-support-contracts.

likely to be required in less than 3 years if demand continues to grow in-line with this forecast.

5 Stakeholder engagement

Table 8 summarises our engagement with stakeholders.

Table 8: Stakeholder engagement to date

Date	Activity
November 2015	Thermal decommissioning analysis
July 2016	Long-list consultation and invitation for information on non-transmission solutions
May 2018	Investigation update
November 2018	Integrated transmission plan
June 2019	Consultation on short-list of options
October 2019	Second request for information for NTS

5.1 Thermal decommissioning analysis

Following the 2015 announcements of decommissioning of major generation plants in the UNI region, Transpower as both system operator and grid owner conducted and published a number of studies on UNI operational limits following Huntly Rankine unit retirements[36].

These reports explained to stakeholders the potential emergent issues, and led to Transpower establishing the *Waikato and Upper North Island Voltage Management (WUNIVM)* major capex investigation to consider what investments may be required to maintain voltage stability into the WUNI region following thermal decommissionings, and as demand grows.

5.2 Long-list consultation

In July 2016, as part of this investigation, we published our long-list consultation document[37] entitled *Waikato and Upper North Island Voltage Management Long-list consultation.*

[36] See www.transpower.co.nz/system-operator/information-industry/impact-thermal-generator-decommissioning and www.transpower.co.nz/upper-north-island-generation-decommissioning-report-and-appendices

[37] The *Long-list consultation* paper, the non-confidential submissions received on it and our *Summary of and response to submissions* are available at https://www.transpower.co.nz/waikato-and-upper-north-island-voltage-management-investigation

This consultation document sought feedback from interested parties on our assessment of the need, our initial long-list of components (especially with regard to non-transmission solutions), and any specific non-transmission solutions and the assumptions (including demand forecasts and generation scenarios) that we planned to use to identify a preferred solution. This consultation also included an invitation for information on non-transmission solutions.

Overall, submitters agreed with our assessment of the need and project scope, in particular around the uncertainty surrounding the need. Submitters also agreed in general to our long-list of options and provided some useful additional information on their pros and cons, options for contracting for services through grid support contracts (GSCs), and construction timelines.

As this project could entail GSCs for voltage support and/or market generation, we refreshed our GSC design document in concert with this consultation and requested feedback on it.

5.3 Investigation update

As the issues are complex, the investigation was time consuming. To keep interested parties informed of our progress since 2016, we published a project update document in May 2018[38].

This document provided an update on the WUNIVM investigation to indicate to interested parties where the WUNIVM investigation was heading and what they might expect in our proposal. The major components of the evolving preferred option were presented along with a discussion of the uncertainties that might impact this option.

5.4 Integrated transmission plan

Our most recent integrated transmission plan[39] (ITP) identified the need for enhancements to the grid in the WUNI region due to actual and proposed reductions to generation capacity, and demand growth. The ITP stated options to manage this need include a combination of:

- static capacitors in various locations in the Waikato region
- a special protection scheme to manage N-G-1 voltage stability limits
- series capacitors on the Brownhill–Whakamaru 400kV-capable line and/or
- dynamic reactive support such as SVC and/or STATCOMs in the Waikato and Auckland regions.

[38] Available at www.transpower.co.nz/waikato-and-upper-north-island-voltage-management-investigation

[39] Available at: www.transpower.co.nz/keeping-you-connected/industry/rcp3/rcp3-proposal-securing-our-energy-future-2020—-2025

The need, short-list options, and proposed investment as described in this proposal are therefore consistent with this integrated transmission plan.

5.5 Short-list consultation

In June 2019, we published our short-list consultation document[40] entitled *Waikato and Upper North Island Voltage Management Short-List Consultation.*

This consultation document sought feedback from interested parties on our assessment of the need, our short-list of components, our approach to the Investment Test and the assumptions (including demand forecasts and generation scenarios) that we used to identify a preferred solution.

There was broad agreement on the voltage stability assumptions that were used, and agreement on our proposed approach to handling any significant market commitments. A number of responses agreed with the need for us to proceed should no further information be received, or to amend or withdraw our investment proposal as new market information is received.

Some issues were raised regarding detailed design and operation of our proposed post-fault demand management scheme. Our response is described in our summary of submissions.

Submitters agreed with our approach to NTSs and recommended that our transmission proposal be flexible to an NTS that only delivers part of the need. There was general agreement on the economic assumptions used, however additional details were sought which we have included in the Options and Costing report.

6 Application to the Commerce Commission

This project is a major capex project within the Capex IM[41]. The major capex project status means that we need to submit a major capex proposal application to the Commerce Commission seeking approval to recover the costs of our investments to meet the need.

The reactive components included in our preferred option are interconnection assets, so the investment cost would be recovered and allocated according to the Transmission Pricing Methodology (TPM), as described in Section 6.2.

Throughout this investigation process we have ensured that the identification of the need and the planning and performance standards used to determine our short-list of options have reflected Good Electricity Industry Practice (GEIP). The dynamic reactive devices that make up our proposed investment are the used throughout the world to manage voltage stability

[40] The *Short-list consultation* paper, the submissions received on it and our *Summary of and response to submissions* are available at https://www.transpower.co.nz/waikato-and-upper-north-island-voltage-management-investigation

[41] Capex IM as detailed in Transpower Individual Price-Quality Determination 2018: see schedule C in comcom.govt.nz/data/assets/pdf_file/0026/88280/Consolidated-Transpower-capital-expenditure-input-methodology-determination-as-at-1-June-2018.PDF

issues. The use of wide-area, post-fault schemes (including demand management) for system management is common but not widespread. As prudent grid owner, we have restricted the scheme to cover specific, very low probability contingencies. Our risk-based economic assessment demonstrates the additional cost of covering these risks with primary plant to be significantly higher than its benefit. The use of a risk-based trade-off such as this is consistent with international practice. Accordingly, our proposed investment in this major capex proposal is consistent with good electricity industry practice.

6.1 Proposal

This is an application to the Commerce Commission for:

Table 9: Proposal at a glance

Proposal at a glance	
What:	Maintain voltage stability in the Waikato and Upper North Island through investing in: • One dynamic reactive device in the Upper North Island capable of delivering (within 10%) 150 Mvar capacitive to 150 Mvar inductive at nominal voltage. • One dynamic reactive device in the Waikato capable of delivering (within 10%) 150 Mvar capacitive to 150 Mvar inductive at nominal voltage. • A post-fault demand management scheme in the Waikato and Upper North Island. • Preparatory works for stage 2[42], including additional investigation, consultation, obtaining property rights and environmental approvals, design work and non-binding tendering for future series capacitors and installation works on the BHL-WKM 1&2 transmission line.
When:	Commence work as soon as funding is approved. Commissioning date assumption (for assets other than preparatory works for stage 2): 31 December 2022
How much:	Transpower is seeking approval for the first stage of a major capex project (staged) with a major capex allowance of $144.5 million.
Incentive elements:	Major capex incentive rate: 15% Exempt major capex: none
Approval expiry date:	31 December 2029[43]

[42] Stage 2 of the investment proposal is the procurement and installation of series capacitors on BHL-WKM 1&2.

[43] We have proposed an approval expiry date of 31 December 2029, which is six years after the commissioning date assumption of 31 December 2022. We have proposed this extra period because a major generation announcement post-approval but before we have committed to expenditure could defer the need for the grid outputs for stage 1 for several years. If this happens it will be efficient to have a reasonable window during which we will not have to re-apply for investment approval

Given the proximity of the need date and lead times for investment approval and procurement, it was not practicable for the NTS procurement process to be completed before this MCP application was submitted. We have therefore departed from that clause under clause 8.1.3(2)(a)(iii) of the Capex IM (having regard to the urgency of the investment need). Respondents to our short-list consultation were supportive of this approach. We note that we received proposals for some non-transmission solutions in response to our long-list consultation.

If the procurement process for non-transmission solutions results in a reliable and economic non-transmission solution or solutions that could defer or reduce the need for transmission (and are not covered by the scope of our proposal) we will either amend our MCP or, if necessary, seek an amendment to the approved project to reflect our revised preferred option.

There is the possibility that a significant generation commitment is made during or following this MCP application. Similarly, if this occurred, and required a material change to the project outputs, planned timing or allowance then we would seek approval to amend these accordingly.

6.2 Major Capex Allowance

If this project is approved by the Commerce Commission, we can recover the costs of the project through the regulated charges for the transmission grid. The Commerce Commission also approves a maximum amount, the Major Capex Allowance (MCA) that we can spend.

We determine an MCA by accounting for the uncertainties in the project cost. The expected cost of this investment proposal is estimated to be $132.3 million in $2019, or $144.5 million once financing costs and inflation are added. The MCA we seek approval for is $144.5 million.

Table 10 shows the derivation of our MCA calculation, including financing costs and inflation. We consider this amount to be our P50 estimate of the costs of the project – that there is equal chance that the project could be delivered for more or could be delivered for less. As with any project, and consistent with the incentive regime, we intend to deliver this project as efficiently as possible. We assume stage 1 components (excluding stage 2 preparatory works) are commissioned at the end of 2022, based on our current forecast of the delivery phase of the project.

Table 10: Major Capex Allowance (MCA)

Item	Capital cost ($000)
Stage 1 investigation	$4,904
Upper North Island 220 kV dynamic reactive device	$55,785
Waikato 110 kV dynamic reactive device	$54,248
Post-fault demand management scheme	$8,060
Stage 2 preparatory works	$9,272
Capex - total risk adjusted (real 2019)	**$132,269**
Inflation	$4,613
Interest during construction (IDC)	$7,587
Major Capex Allowance ($2022)	**$144,469**

The MCA is higher than the costs in Section 3.4 because it includes interest during construction, investigation costs, and inflation. Refer to the Options and Costing report for more detail on the calculation of the MCA.

Table 11 shows the estimated probability distribution around the P50 (excl. inflation and IDC). We have used a triangle distribution to calculate the P50.

Table 11: Estimated probability distribution for MCA (excl. inflation and IDC)

Item	Lower-bound cost estimate ($m)	Most likely (mode) cost estimate ($m)	Upper-bound capital cost estimate ($m)	P50 capital cost estimate ($m)
Stage 1 investigation	4.9	4.9	4.9	4.9
Upper North Island dynamic reactive device	42.8	55.3	75.0	55.8
Waikato dynamic reactive device	42.1	53.4	74.7	54.2
Demand management scheme	5.4	7.0	12.4	8.1
Stage 2 preparatory works	8.7	8.8	10.5	9.3
Total	**103.9**	**129.3**	**177.5**	**132.3**

6.3 Grid Outputs

The components in the box below are the grid outputs to be delivered by this stage 1 project. We also show the grid outputs we intend to propose in the second stage of this MCP.

Grid Outputs (Stage 1)

- Procure, install and commission two dynamic reactive devices, each capable of delivering (within 10%) 150 Mvar capacitive to 150 Mvar inductive at nominal voltage: one in the Upper North Island and the other in the Waikato.
- Design, install and commission a post-fault demand management scheme in the Waikato and Upper North Island.
- Preparatory works for stage 2, including additional investigation, consultation, obtaining property rights and environmental approvals, design work and non-binding tendering for future series capacitors and installation works on the BHL-WKM 1&2 transmission line.

Grid Outputs (Stage 2)

- Procure, install and commission series capacitors on the BHL-WKM 1&2 transmission lines.

6.4 Pricing implications

If the Commerce Commission approves this investment proposal and we design, build and commission the reactive power devices as outlined, interconnection transmission charges will increase under the existing Transmission Pricing Methodology (TPM).

If the TPM was to change according to the Electricity Authority's recent issues paper, we would likely need to determine the beneficiaries of this investment and the proportion of charges allocated to each. Under such a methodology, we consider the beneficiaries of this investment could include distribution companies, directly connected consumers, and generators in the North Island.

We expect our increase in revenue to peak in 2027 at approximately $10m, after which revenue decreases as the assets depreciate. We estimate an average consumer's electricity costs would increase by approximately $2 p.a. as a result of these stage 1 investments.

Further detail on our estimate of the increase in transmission costs is provided in Appendix 1 of the Options and Costing report, and Attachment F.

Appendix 1 Attachments

Further information supporting this proposal is included in the following appendices:

Attachment A – Compliance requirements

This document provides a checklist as to how this proposal meets the requirements to be approved by the Commerce Commission under the Capex IM.

Attachment B – Power systems analysis report

This document describes the technical assumptions and methodology that were used to ensure a consistent and repeatable analysis of the power system. The document presents the need and options that address the voltage stability need in the WUNI region up to 2045.

Attachment C – Options and costing report

This document describes:

- how the long list of options was reduced to a short list of options
- detail of how the short list options were costed and how the Major Capex Allowance was derived
- detail of the Investment Test analysis used to identify benefits and hence the option which satisfies the requirements of the Investment Test
- the estimated transmission price impact of each short-list option and the preferred option.

Attachment D – Summary of submissions

This document summarises the submissions received in our previous consultations and includes our responses to the points raised in those submissions.

Attachment E – CEO certification

This document includes the CEO certification as required by the Capex IM.

Attachment F – Spreadsheet of Pricing by GXP/GIP

This spreadsheet contains indicative pricing implications by GXP and GIP should this MCP be approved, as required by the Capex IM.