PUBLIC VERSION
13.1/J10944
853015

COMMERCE COMMISSION

Standard Terms Determination for the designated services of Telecom's unbundled copper local loop network service (Sub-loop UCLL), Telecom's unbundled copper local loop network co-location service (Sub-loop Co-location) and Telecom's unbundled copper local loop network backhaul service (Sub-loop Backhaul)

Decision 672

Determination under section 30M of the Telecommunications Act 2001

The Commission: Paula Rebstock
Anita Mazzoleni
Gowan Pickering

Date of Determination: 18 June 2009

CONFIDENTIAL MATERIAL IN THIS DETERMINATION IS CONTAINED IN SQUARE BRACKETS

ISBN 978-1-869452-78-0

CONTENTS

LIST OF TERMS AND ABBREVIATIONS

Access Seeker	means an Access Seeker under the Act that has made a request in writing pursuant to section 30S(1) of the Act to make a Sub-loop Service available on the Sub-loop Services Terms.
Act	means the Telecommunications Act 2001.
Commission	means the Commerce Commission in the course of performing its functions under the Act.
Determination Date	means the date of this Sub-loop Services Standard Terms Determination.
Distribution Cabinet	means a Cabinet and any associated Pedestal or Pedestals in respect of which DSL services are able to be provided to one or more End-users using equipment installed in the Cabinet and/or an associated Pedestal.
Distribution Cabinet Services	means all of the ancillary services supplied by Telecom to the Access Seeker in a Distribution Cabinet in accordance with the Sub-loop Services Terms (including heat management, noise management, power, security, seismic bracing, earthing, cable trays and lighting).
DSLAM	means Digital Subscriber Line Access Multiplexer – a device that connects many digital subscriber lines to a network by multiplexing the digital subscriber line traffic onto one or more network trunk lines.
End User	means a person who is the ultimate recipient of the Sub-loop UCLL Service (or of another service the provision of which relies in whole or in part on the Sub-loop UCLL Service).
Ethernet	means a common communication protocol, defined in international standard IEEE 802.3, that is used to connect multiple devices on the same Layer 2 network.
ETP	means the external termination point for telecommunications services at an End-user's premises or, where there is no termination point external to the premises, either the first jack on the premises wiring or, alternatively, the building distribution frame.
Exchange	means a Telecom owned, leased or licensed building with a floor area of at least 15 square metres and a main distribution frame terminating copper local loop of at least 200 pairs, the primary function of which is to provide fixed wire line telecommunications services, and includes all of the Telecom owned, leased or licensed property on which the building is situated.
First Assessment Date	means the first Working Day that is four months before the scheduled installation date for a New Distribution Cabinet under the Cabinetisation Notice.

Grooming	means: (a) in relation to HDP block(s), the rearrangement of Access Seeker Equipment, Telecom equipment or Other Service Provider equipment or tie cables (including, if necessary, the removal of unused tie cables and associated HDP block(s)) to realise unused capacity on the Distribution Cabinet DF; or (b) in relation to block(s) terminating the Sub-loop Network, the rearrangement of Access Seeker Equipment, Telecom equipment or Other Service Provider equipment or tie cables (including, if necessary, the removal of unused tie cables and associated HDP block(s)) to realise unused capacity on the Distribution Cabinet DF.
Handover Point	means the service demarcation point for the relevant Sub-loop Service.
Implementation Plan	means the document 'Implementation Plan' that is part of Appendix A.
Installed Distribution Cabinet	means a Distribution Cabinet that is not a New Distribution Cabinet.
KPIs	means the key performance indicators set out in the Implementation Plan.
Local Exchange	means, in respect of any Distribution Cabinet, the Exchange where the feeder to the Distribution Cabinet is terminated for the purposes of the Sub-loop Backhaul Service.
LMNP	means the terms for local and mobile number portability in New Zealand.
Market Share Assessment	means the process of allocating available Rack Units under the Sub-loop Co-location Operations Manual.
Migration	means the move of Exchange based unbundled or resold services that entail access to the copper line between the Exchange and the End User's premises to the Sub-loop UCLL Service, and is part of the Distribution Cabinet, or initial or subsequent equipment, installation process.
New Distribution Cabinet	means any Distribution Cabinet that was installed, or is due to be installed, at its permanent location at least four months after the Determination Date.
OFDF	means optical fibre distribution frame.
OSS	means Telecom's operational support systems, and are the software applications needed to enable the Access Seeker to interact with Telecom's Network, and to enquire about, order, repair and be billed for the Sub-loop Services.
Other Service Provider	means a provider of telecommunications services other than the Access Seeker or Telecom, which for the avoidance of doubt includes any other access seekers that independently access the Sub-loop Co-location Service.
Pedestal	means any Telecom owned, leased or licensed structure associated with, or structural extension of a Distribution Cabinet for the purpose of housing equipment (including any necessary supporting equipment) used

	to provide services over the copper loops connected to that Distribution Cabinet.
Rackprint	means a space of so many Rack Units at any Distribution Cabinet that is available or used for locating equipment but excludes any space occupied by tie cables.
Rack Unit	means a unit of space that is 44.45mm in height within the Sub-loop Co-location Service Area of a Distribution Cabinet (including any associated Pedestal).
RFS	means ready for service.
SFP	means Small Form-factor Pluggable, a transceiver used to transmit and receive signals over fibre. An SFP interfaces a network device mother board to a fibre optic cable or unshielded twisted pair networking cable.
Soft Launch	means the supply of a component of the Sub-loop Services on a small scale for the purposes of testing and bedding down prior to delivery of the relevant service.
STD	means a standard terms determination made by the Commission under section 30M of the Act.
STP	means Telecom's standard terms proposal for the Sub-loop Services.
Sub-loop Backhaul Service	means Telecom's sub-loop unbundled copper local loop network backhaul service as described in the Sub-loop Backhaul Service Description or (as the context requires) any part of that service.
Sub-loop Backhaul Operations Manual	means the manual set out in schedule 4 of service appendix 3 of the Sub-loop Services General Terms.
Sub-loop Backhaul Price List	means the list set out in schedule 2 of service appendix 3 of the Sub-loop Services General Terms.
Sub-loop Backhaul Service Description	means the description set out in schedule 1 of service appendix 3 of the Sub-loop Services General Terms.
Sub-loop Backhaul Service Level Terms	means the terms set out in schedule 3 of service appendix 3 of the Sub-loop Services General Terms.
Sub-loop Co-location Access Terms	means the terms set out in schedule 5 of service appendix 2 of the Sub-loop Services General Terms.
Sub-loop Co-location Operations Manual	means the manual set out in schedule 4 of service appendix 2 of the Sub-loop Services General Terms.
Sub-loop Co-location Price List	means the list set out in schedule 2 of service appendix 2 of the Sub-loop Services General Terms.
Sub-loop Co-location Service	means Telecom's sub-loop unbundled copper local loop network co-location service as described in the Sub-loop Co-location Service Description or (as the context requires) any part of that service.
Sub-loop Co-location Service Description	means the description set out in schedule 1 of service appendix 2 of the Sub-loop Services General Terms.

Sub-loop Co-location Service Level Terms	means the terms set out in schedule 3 of service appendix 2 of the UBA Backhaul General Terms.
Sub-loop MPF	means a circuit comprising a pair of twisted copper conductors between the ETP and the Distribution Cabinet.
Sub-loop Network	means Telecom's copper network as it relates to the connection of local loops between the ETP and the handover point on the DF in a Distribution Cabinet (including any relevant line in the Distribution Cabinet).
Sub-loop Services	means all or (as the context may require) any of: (a) the Sub-loop UCLL Service; (b) the Sub-loop Co-location Service; and (c) the Sub-loop Backhaul Service.
Sub-loop Services Conference	means the conference held by the Commission on 8 – 9 December 2008 in respect of the Sub-loop Services STD under section 30L of the Act.
Sub-loop Services General Terms	means the document 'Sub-loop Services General Terms' that is part of the Sub-loop Services STD.
Sub-loop Services STD	means the standard terms determination in relation to the Sub-loop Services.
Sub-loop Services Terms	means, together, the Sub-loop Services General Terms and all the services appendices to the Sub-loop Services General Terms (including the schedules thereto) as described in the first page of the Sub-loop Services General Terms.
Sub-loop UCLL Operations Manual	means the manual set out in schedule 4 of service appendix 1 of the Sub-loop Services General Terms.
Sub-loop UCLL Price List	means the list set out in schedule 2 of service appendix 1 of the Sub-loop Services General Terms.
Sub-loop UCLL Service	means Telecom's sub-loop unbundled copper local loop network service as described in the Sub-loop UCLL Service Description or (as the context requires) any part of that service.
Sub-loop UCLL Service Description	means the description set out in schedule 1 of service appendix 1 of the Sub-loop Services General Terms.
Sub-loop UCLL Service Level Terms	means the terms set out in schedule 3 of service appendix 1 of the UBA Backhaul General Terms.
TCF	means the Telecommunications Carriers' Forum.
Telecom	means Telecom Corporation of New Zealand Limited or Telecom New Zealand Limited including any of its subsidiaries as the context requires.
UBA Backhaul STD	means the standard terms determination in relation to Telecom's unbundled bitstream access backhaul service as described in the Act.
UCLL	means unbundled copper local loop.

UCLL Backhaul STD	means the standard terms determination in relation to Telecom's unbundled copper local loop network backhaul (telephone exchange to interconnect point) service as described in the Act.
UCLL Co-location STD	means the standard terms determination in relation to Telecom's unbundled copper local loop network co-location service as described in the Act.
UCLL MPF	means a circuit comprising a pair of twisted copper conductors between the ETP and the Exchange distribution frame.
UCLL STD	means the standard terms determination in relation to Telecom's unbundled copper local loop network service as described in the Act.

EXECUTIVE SUMMARY[1]

i. This standard terms determination ('**STD**') is for the following designated access services (the '**Sub-loop Services**'):

- the **Sub-loop UCLL Service**, which provides access to the copper lines between the End User's premises and Telecom's Distribution Cabinet;
- the **Sub-loop Co-location Service**, which allows Access Seekers to install their own equipment in Telecom's Distribution Cabinets in order to deliver services over the copper lines to the End User's premises; and
- the **Sub-loop Backhaul Service**, which provides transmission capacity between Telecom's Distribution Cabinet and the relevant Exchange.

ii. The Sub-loop Services allow Access Seekers to provide telecommunications services (such as voice and broadband internet services) to their customers without the need to replicate Telecom's infrastructure.

iii. In this STD, the Commission has determined the price and non-price terms for the Sub-loop Services. This STD contains sufficient terms on which Telecom must supply any of the Sub-loop Services to an Access Seeker without the need for the Access Seeker to enter into an agreement with Telecom for provision of the service.

iv. The Sub-loop Services are particularly relevant to the 3,600 Distribution Cabinets that Telecom is in the process of deploying as part of its fibre-to-the-node ('**FTTN**') investment. This FTTN investment will provide faster transmission speeds to End Users by replacing a significant portion of Telecom's copper network with fibre, and by locating some active equipment closer to the End User premises (i.e., in Distribution Cabinets rather than in Exchanges).

Price Terms

v. The initial pricing principle ('**IPP**') for each of the Sub-loop Services requires the Commission to determine the price terms for the Sub-loop Services by benchmarking against prices for similar services in comparable countries that use a forward-looking cost-based pricing method.[2] A summary of the main charges for each of the Sub-loop Services is set out below.

Sub-loop UCLL Service

vi. The Commission has determined the monthly rental charges for the Sub-loop UCLL Service by benchmarking sub-loop prices as a ratio of the equivalent full loop prices in other jurisdictions, and applying that proportion (60.4%) to the monthly UCLL rental charge determined by the Commission in the UCLL STD.

[1] This executive summary does not form part of the Commission's Standard Terms Determination.
[2] The IPP for each of the Sub-loop Services is set out in Schedule 1 of the Telecommunications Act 2001.

vii. The Commission has used this same approach to set the price for the Sub-loop UCLL connection charges, and has also applied the 25% discount that was used in the UCLL STD for bulk orders.[3]

viii. Accordingly, the Commission has set the following monthly rental, new connection, bulk transfer and migration charges for the Sub-loop UCLL Service.

Service component	**Charge**
Benchmarked ratio (Sub-loop/Full UCLL)	60.4%
Sub-loop MPF rental (urban)	$11.99 per month*
Sub-loop MPF rental (non-urban)	$22.14 per month*
New connection (without an End User Site visit)	$108.77
Bulk transfers or new connections (10 or more)	$81.57
New connection (with an End User site visit)	$258.94
Migration (from the Local Exchange to the Distribution Cabinet)	Price on application

* Calculated by applying the benchmarked ratio of 60.4% to the UCLL MPF rental of $19.84 for urban areas and $36.63 for non-urban areas (as determined by the Commission in the UCLL STD).

Sub-loop Co-location Service

ix. The recurring Sub-loop Co-location charge is to recover Telecom's costs of building, installing and maintaining its Distribution Cabinets. The Access Seeker must pay the portion of this cost that reflects the proportion of occupied space (measured in Rack Units) that their active equipment uses in the Distribution Cabinet.

x. The monthly recurring charge for co-location of Access Seeker Equipment in a Distribution Cabinet is to be calculated on a cabinet-by-cabinet basis according to the following formula:

$$A = (B_1 + B_2) \times \left(\frac{C}{D}\right)$$

Where: A = the monthly co-location charge paid by the Access Seeker
B_1 = the total recurring charge for the Distribution Cabinet ($972 per month)
B_2 = additional cost of any additional Pedestal (excluding the associated power infrastructure), converted into a monthly charge using a amortisation factor of 1.44% (based on an asset life of 10 years and a pre-tax cost of capital of 11.1%), plus a common cost mark up of 10%
C = the number of Rack Units used by the Access Seeker

[3] A bulk order in this Sub-loop Services STD is defined as 10 or more transfers or new connections.

D = the total number of occupied Available Rack Units (including those to be used by the Access Seeker)

xi. In calculating the total recurring charge for each Distribution Cabinet, the Commission has used an expected economic cabinet life of 10 years. This has been reduced from the 20 years used in the draft STD, to reflect the prospect of a fibre-to-the-home deployment in New Zealand.

Sub-loop Backhaul Service

xii. Although the legislative service descriptions for the Sub-loop Backhaul Service and the UCLL Backhaul Service are very similar, the Commission considers that in order to best give effect to section 18 of the Act, these descriptions must be interpreted based on the practicalities of delivery of the services.

xiii. The Commission understands that the Sub-loop Backhaul Service is to be provisioned using dedicated fibre for each instance of the service (i.e., a separate fibre for each unique Sub-loop Backhaul Service), with Telecom active equipment at the Exchange (for the purposes of managing the service). In addition, the Sub-loop Backhaul Service is to be supplied over distances typically ranging up to 5 km.

xiv. This is significantly different from the UCLL Backhaul Service, which includes Telecom active equipment at both ends of the service, and is typically provided over much longer distances (ranging up to 400 km). These differences mean that each service will have different cost drivers. Accordingly, the Commission has determined a pricing structure that differs from that used for the UCLL Backhaul STD.

xv. Under a dedicated fibre service, bandwidth is unlikely to be a significant driver of cost up to speeds of 1 Gbps. Accordingly, the Commission has determined that the Sub-loop Backhaul Service is to be supplied as a 1 Gbps Ethernet service, with the monthly rental set in accordance with a fibre-based pricing model.

xvi. Under this approach, the recurring charge is determined by dividing the average cost of providing fibre links between the Distribution Cabinet and the Exchange by the number of fibres used at that specific cabinet, and adding the cost of Telecom active equipment in the Exchange. The monthly recurring charge for a the Sub-loop Backhaul Service is to be calculated on a cabinet-by-cabinet basis according to the following formula:

$$A = B \times \left(\frac{C}{D} \right) + E$$

Where: A = the monthly charge paid by the Access Seeker
B = monthly passive equipment costs for an Urban Distribution Cabinet ($1,911 per month) or monthly passive equipment costs for a Non-urban Distribution Cabinet ($3,197 per month)[4]

[4] "Urban" and "Non-urban" Distribution Cabinets are as defined in the Sub-loop UCLL Price List.

C = the number of fibres provided to the Access Seeker between the Distribution Cabinet and Local Exchange in respect of the Sub-loop Backhaul Service
D = the total number of fibres used between the Distribution Cabinet and Local Exchange
E = monthly active equipment costs ($430 per month)

xvii. Given that the connection of the service at the Exchange requires the same work as under the UCLL Backhaul Service, the Commission has determined that the same connection charge of $4,030 should apply. However, a charge of $541 is applicable for the Distribution Cabinet end of the Sub-loop Backhaul Service, given that no active equipment is present at this end of the service.

Section 18

xviii. Section 19 of the Act requires the Commission to make the determination that best gives, or is likely to best give, effect to the purpose set out in section 18, which is the promotion of competition in telecommunications markets for the long-term benefit of End Users. The Commission is also required to consider the efficiencies that will result, or will be likely to result from its determination.

xix. Telecom is in the process of deploying 3,600 Distribution Cabinets throughout its network as part of its cabinetisation programme. Although this FTTN investment will enable the provision of new higher-speed, high-value services, Telecom and Access Seekers face a number of risks in relation to pricing of the Sub-loop Services.

xx. If prices are set too low, so that Telecom is unlikely to recover the efficient costs of providing the Sub-loop Services, this would discourage further FTTN investment. Conversely, if access prices are set too high, the detrimental impact on take-up of the Sub-loop Services may unnecessarily hinder competition, adversely impacting on the long-term benefits to End Users.

xxi. Accordingly, in setting the price terms for the Sub-loop Services, the Commission has balanced investment incentives of both Access Seekers and Telecom. For example, in order to reflect the risks faced by Telecom, the Commission has:

- reduced the expected economic life of Distribution Cabinets from 20 years (in the draft STD) to 10 years (in order to reduce the risk associated with a fibre-to-the-home deployment);
- taken the 75th percentile observation in the benchmarking of fibre-related trenching costs;
- taken into account the impact of the global recession in its consideration of the debt premium and risk-free rate when estimating the appropriate costs of capital for the Sub-loop Co-location and Sub-loop Backhaul Services; and

- allowed for the recovery of Distribution Cabinet costs on the basis of the actual number of occupied Rack Units (and similarly, the recovery of backhaul costs on the basis of the actual number of fibres used).

xxii. In respect of the incentives of Access Seekers, the Commission has used the median benchmark for the Sub-loop MPF Service, and has determined a price for the Sub-loop Backhaul Service that is likely to best reflect the costs of supplying the service. The Commission has also made a number of other specific adjustments, for example in relation to opex costs, to better reflect the costs of supplying the Sub-loop services to Access Seekers.

xxiii. The Commission has also had regard to the investment incentives of Access Seekers in its consideration of relativity between the Sub-loop UCLL Service and Telecom's Unbundled Bitstream Access ('**UBA'**) Service.

Relativity

xxiv. In accordance with the Act, the Commission is required to consider the relativity between the Sub-loop UCLL Service and the UBA Service. Under the UBA STD, the Commission established that the UBA and UCLL prices were set at an appropriate relativity.

xxv. The Commission considers that relativity between the full UCLL and UBA services can be extended to the Sub-loop UCLL service given that the Sub-loop Services are effectively a replacement of the UCLL Service.[5] Comparison of the UCLL and Sub-loop Services on a per-End User basis indicates that costs incurred by the Access Seeker for the Sub-loop Services are approximately 26% higher than the UCLL Service.

xxvi. The Commission considers such a differential between the Sub-loop Services charges and the UCLL charges is appropriate, given differences in the cost of supplying the two services, such as replacement of a passive cabinet with an active Distribution Cabinet and use of Telecom active equipment in the Exchange for Sub-loop Backhaul. Failing to recognise the efficient costs of providing the Sub-loop Services, such as by setting charges below efficient cost, is unlikely to give best effect to section 18 of the Act.

xxvii. The Commission also considers that the potential revenue gains from using cabinet-based equipment to deliver new retail telecommunications services, and higher take-up of broadband services, should justify the additional costs of supply when compared to Exchange-based services. This fits with the intended objective of investment in new Distribution Cabinets, which is to allow higher transmission speeds in the access network in order to provide for new telecommunications services that are in the long-term benefit of End Users.

xxviii. Accordingly, the Commission notes that it has given appropriate consideration to the relativity between the regulated charges for the Sub-loop UCLL Service and the UBA Service, and has set prices that are likely to give best effect to section 18 of the Act.

[5] See the discussion below regarding the 'ladder of investment', of which (as noted below by Ofcom) the sub-loop service is a component.

Non-price Terms

xxix. The Commission has also determined the non-price terms for access to the Sub-loop Services. In determining the non-price terms, the Commission has made amendments to the draft STD where the Commission considers that amendment is required in order to best give effect to section 18 of the Act.

Space allocation

xxx. An important consideration in setting the non-price terms for the Sub-loop Services relates to the allocation of space within Distribution Cabinets. The Commission has revised the space allocation provisions set out in the draft STD in order to achieve greater flexibility and simplicity, in line with the general support for such an approach that was expressed during consultation on the proposed space allocation rules.

xxxi. The Commission has determined that where demand for space in New Distribution Cabinets at the First Assessment Date is greater than the available space, then there is to be a good faith negotiation process to facilitate a mutually agreed allocation of space, with a market share-based allocation of Rack Units as a fall-back position. Market share is to be assessed based on the number of lines to be served from a New Distribution Cabinet.

xxxii. Where there is insufficient space in an Installed Distribution Cabinet to meet an order, then the Access Seeker has the option of requesting rearrangement of active equipment, invoking the 'use-it-or-lose-it' policy for the removal of equipment that will not be used in the next three months, or a negotiation process to facilitate a mutually agreeable allocation of space. Potential outcomes may include, for example, another Access Seeker volunteering to replace their equipment with smaller equipment, Telecom agreeing to build additional capacity in the form of a Pedestal, or the Access Seeker choosing to install a hardened sealed DSLAM alongside a Distribution Cabinet.

Implementation

xxxiii. The Commission has determined that Telecom's operational support systems must be in place within 20 working days of release of the STD. The first order(s) for each significant component of the Sub-loop Services will be subject to a Soft Launch during which service level performance penalties will not apply.

Confidential information cited in this determination is subject to the confidentiality order made by the Commission under section 15(i) of the Act and section 100 of the Commerce Act 1986 ('the Order'). The Order in relation to the Sub-loop Services STD process is dated 7 March 2008 and will have effect until 20 working days from the date on which the Commission issues a Determination for the proceedings under section 30M of the Act.

Information in relation to Telecom's restricted information is denoted as [TNZRI]. Where TNZRI also qualifies as Chorus' confidential information, the restricted information is denoted as [TNZRI-CH]. Access seeker restricted information is denoted in a similar way, for example, TelstraClear restricted information is labelled [TCLRI]. Commission only information is denoted as [COI].

All restricted and COI is subject to the Order and has been extracted from the public version of this determination.

Key documents are available on the Commission's website at:

http://www.comcom.govt.nz/IndustryRegulation/Telecommunications/StandardTermsDeterminations/SubloopUCLLservice/DecisionsList.aspx

INTRODUCTION

The Sub-loop Services STD

1. This standard terms determination (**STD**) is in respect of the following designated access services under subpart 2 of Part 1 of Schedule 1 of the Act and, in particular, as they relate to the Sub-loop Network:

   - Telecom's unbundled copper local loop network service (and its associated functions) that enables access to, and interconnection with, that part of Telecom's local loop network (including any relevant line in the Distribution Cabinet) between an End User's building (or building distribution frame) to the handover point in a Distribution Cabinet (or equivalent facility), (the **Sub-loop UCLL Service**);

   - Telecom's unbundled copper local loop network co-location service (and its associated functions) that provides co-location facilities for an Access Seeker's equipment, and access to the handover point at Telecom's Distribution Cabinet (or equivalent facility) for the purposes of providing access to, and interconnection with, Telecom's unbundled copper local loop network (including any necessary supporting equipment), (the **Sub-loop Co-location Service**); and

   - Telecom's unbundled copper local loop network backhaul (Distribution Cabinet to telephone Exchange) service (and its associated functions) that provides transmission capacity in Telecom's network (whether the transmission capacity is copper, fibre, or anything else) between the handover point in Telecom's Distribution Cabinet (or equivalent facility) and the handover point in Telecom's local telephone Exchange (or equivalent facility), for the purposes of providing access to, and interconnection with, Telecom's unbundled copper local loop network (including any necessary supporting equipment), (the **Sub-loop Backhaul Service**).

   (For the purposes of this STD, the above three services are together referred to as the **Sub-loop Services**).

2. The STD for the Sub-loop Services specifies sufficient terms to allow access to the service without the need for the Access Seeker to enter into an agreement with the access provider. This STD comprises this decision report and the appended:

   - Sub-loop Services Terms comprising:

     - Sub-loop Services General Terms;

     - Service Appendix 1: Sub-loop UCLL Service:
       (a) Schedule 1 – Sub-loop UCLL Service Description;
       (b) Schedule 2 – Sub-loop UCLL Price List;
       (c) Schedule 3 – Sub-loop UCLL Service Level Terms; and
       (d) Schedule 4 – Sub-loop UCLL Operations Manual;

- Service Appendix 2: Sub-loop Co-location Service:
  (e) Schedule 1 – Sub-loop Co-location Service Description;
  (f) Schedule 2 – Sub-loop Co-location Price List;
  (g) Schedule 3 – Sub-loop Co-location Service Level Terms;
  (h) Schedule 4 – Sub-loop Co-location Operations Manual; and
  (i) Schedule 5 – Sub-loop Co-location Access Terms;

- Service Appendix 3: Sub-loop Backhaul Service:
  (j) Schedule 1 – Sub-loop Backhaul Service Description;
  (k) Schedule 2 – Sub-loop Backhaul Price List;
  (l) Schedule 3 – Sub-loop Backhaul Service Level Terms; and
  (m) Schedule 4 – Sub-loop Backhaul Operations Manual;

- Implementation Plan.

3. The following sections of this document provide explanation and reasons for the substantive decisions that the Commission has made in relation to the final STD (and other substantive decisions that do not result in such amendments), in order to form the Sub-loop Services Terms that appear in Appendix A.

4. In setting the Sub-loop Services Terms, the Commission has considered all of the submissions and cross-submissions it has received from interested parties during the STD process, as well as statements made at the Sub-loop Services Conference. The Commission has also sought expert advice from external advisers.

5. Many of the terms in the Sub-loop Services General Terms and schedules are common to the previous standard terms determinations[6] released by the Commission. In the interests of brevity, parties are referred to the reasons provided in the previous STDs in respect of these common terms.

6. In some instances the Commission may have agreed with the general submission made by a party, but did not consider the proposed alternative wording to be appropriate. In such cases, the Commission has made amendments using its own wording.

7. For clarity, in this decision paper, the Commission has referred to Telecom when referring to provisions in the STP and STD, and Telecom business units (i.e., Telecom (Group), Telecom (Wholesale) and Telecom (Chorus)) when referring to submissions and additional information provided by Telecom business units.

Background to the determination process

8. On 21 December 2007, the Commission initiated the STD process in relation to the Sub-loop Services under section 30C of the Act.

[6] Previous Standard Terms Determinations released by the Commission include UCLL, UCLL Co-location, UBA, UCLL Backhaul, UBA Backhaul and Mobile Co-location.

9. The Commission conducted a scoping workshop on 27 February 2008. The workshop was open to all parties to the STD. The purpose of the workshop was to provide the Commission with information to assist it in specifying:

   - a reasonable period of time within which Telecom must submit a standard terms proposal (STP) under section 30F; and
   - any additional requirements for that proposal under 30F(2).

10. On 7 March 2008 the Commission gave written notice to Telecom requiring it to submit to the Commission, a single STP covering the Sub-loop Services by 27 June 2008 that complied with section 30G of the Act. In the notice, the Commission specified a number of additional requirements that Telecom was required to provide in its proposal.

11. On 9 May 2008, the TCF agreed a set of recommendations on the key non-price terms of the Sub-loop Services, which were to be included in Telecom's STP.

12. On 27 June 2008, Telecom submitted an STP for the Sub-loop Services. Public notice was given and interested parties were invited to make submissions.

13. On 18 July 2008, submissions on the Sub-loop Services STP were received from TelstraClear, Vodafone, Orcon/Kordia/CallPlus and Telecom (Wholesale). The Commission considered these submissions in developing the draft STD.

14. On 5 September 2008 the Commission issued its draft Sub-loop Services STD in accordance with section 30K of the Act. Submissions were received on the draft STD on 15 October 2008 from Covec, Orcon/Kordia/CallPlus, Telecom (Chorus), Telecom (Group), TelstraClear, Vector and Vodafone. Cross-submissions on the draft STD were received on 31 October 2008 from Covec, Orcon/Kordia/CallPlus, Telecom (Chorus), Telecom (Group), TelstraClear, Vector and Vodafone.[7]

15. On 8 and 9 December 2008 the Commission held a public conference, pursuant to section 30L of the Act, to seek additional information on particular aspects of the submissions and to provide interested parties with an opportunity to give a brief overview of their position, by presenting opening and closing statements.

16. On 30 January 2009 the Commission sought further submissions (later followed by cross-submissions) from interested parties on issues in relation to space allocation and the Sub-loop Backhaul Service. Submissions were received on 2 March 2009 from Covec, Orcon, Telecom (Chorus), Telecom (Group), TelstraClear, Vector and Vodafone. Cross-submissions were received on 20 March 2009 from Covec, Telecom (Chorus), Telecom (Group), Vector and Vodafone.[8]

---

[7] Submissions and cross-submissions from Telecom (Chorus) and Telecom (Group) included material from their respective experts – LECG and Professor Hausman.

[8] The submission from Telecom (Chorus) included material from LECG and the cross-submission from Telecom (Group) included material from Nera.

17. On 31 March 2009 the Commission held an industry workshop to address practical space allocation issues raised through submissions.

18. On 20 April 2009 the Commission sought further submissions (later followed by cross-submissions), on the cost of capital used to determine Sub-loop Co-location and Backhaul recurring charges, Sub-loop UCLL connection charges, and two potential approaches to setting core charges for the Sub-loop Backhaul Service. Submissions were received on 4 May 2009 from Covec, Telecom (Chorus),[9] Telecom (Group),[10] Vector and Vodafone. Cross-submissions were received on 11 May 2009 from Covec, Telecom (Chorus), and Telecom (Group).

19. Key documents are available on the Commission's website at:

    http://www.comcom.govt.nz/IndustryRegulation/Telecommunications/StandardTermsDeterminations/SubloopUCLLservice/DecisionsList.aspx

[9] The submission from Telecom (Chorus) included material from LECG.
[10] The submission from Telecom (Group) included material from PricewaterhouseCoopers (PwC).

THE DETERMINATION FRAMEWORK

Purpose

20. In making this STD, the Commission must consider the purpose set out in section 18 of the Act. Section 18 describes the purpose of Part 2 and Schedules 1, 3, and 3A as follows:

> **18 Purpose**
>
> (1) The purpose of this Part and Schedules 1 to 3 is to promote competition in telecommunications markets for the long-term benefit of end-users of telecommunications services within New Zealand by regulating, and providing for the regulation of, the supply of certain telecommunications services between service providers.
> (2) In determining whether or not, or the extent to which, any act or omission will result, or will be likely to result, in competition in telecommunications markets for the long-term benefit of end-users of telecommunications services within New Zealand, the efficiencies that will result, or will be likely to result, from that act or omission must be considered.
> (3) Except as otherwise expressly provided, nothing in this Act limits the application of this section.
> (4) Subsection (3) is for the avoidance of doubt.

21. Section 19 of the Act directs the Commission to, when making a determination under Part 2, make the determination that best gives, or is likely to best give, effect to the purpose set out in section 18. Section 19 states:

> **19 Commission and Minister must consider purpose set out in section 18 and additional matters**
>
> If the Commission or the Minister (as the case may be) is required under this Part or any of Schedules 1, 3, and 3A to make a recommendation, determination, or a decision, the Commission or the Minister must—
> (a) consider the purpose set out in section 18; and
> (b) if applicable, consider the additional matters set out in Schedule 1 regarding the application of section 18; and
> (c) make the recommendation, determination, or decision that the Commission or Minister considers best gives, or is likely to best give, effect to the purpose set out in section 18.

The service description

22. This STD concerns the three designated access services termed the Sub-loop Services. These services are set out in subpart 1 of Part 2 of Schedule 1 of the Act, and are defined as follows:

Telecom's unbundled copper local loop network

Description of service:	A service (and its associated functions, including the associated functions of Telecom's operational support systems) that enables access to, and interconnection with, Telecom's copper local loop network (including any relevant line in the exchange or Distribution Cabinet)

Conditions:	Nil
Access provider:	Telecom
Access seeker:	A service provider who seeks access to the service
Access principles:	The standard access principles set out in clause 5
Limits on access principles:	The limits set out in clause 6
Initial pricing principle:	Benchmarking against prices for similar services in comparable countries that use a forward-looking cost-based pricing method
Final pricing principle:	TSLRIC
Requirement referred to in section 45 for final pricing principle:	Nil
Additional matters that must be considered regarding application of section 18:	The Commission must consider relativity between this service and Telecom's unbundled bitstream access service (to the extent that terms and conditions have been determined for that service)

Telecom's unbundled copper local loop network co-location

Description of service:

A service (and its associated functions, including the associated functions of Telecom's operational support systems) that provides co-location facilities for an access seeker's equipment, and access to the handover point, at Telecom's local telephone exchange or Distribution Cabinet (or equivalent facility) for the purposes of providing access to, and interconnection with, Telecom's unbundled copper local loop network (including any necessary supporting equipment)

To avoid doubt, **access seeker's equipment** includes the equipment of any person other than the access seeker (including any line) if that equipment is being used to support the provision of backhaul for the access seeker

To avoid doubt, this service includes access to, and the use of, space in, on, or around Telecom's local telephone exchange or Distribution Cabinet (or equivalent facility) for the purposes of installing and maintaining the access seeker's equipment

Conditions:

Any of the following:

(a) an application for a determination by the access seeker of the service is pending in respect of Telecom's unbundled copper local loop network; or

(b) a standard terms development process has been initiated under subpart 2A of Part 2 in respect of Telecom's unbundled copper local loop network; or

(c) the access seeker of the service is a party to a determination under section 27 that has not expired, or is a party to a standard terms determination under section 30M, in respect of Telecom's unbundled copper local loop network; or

(d) an agreement for Telecom's unbundled copper local loop network (or similar unbundled local loop network service) is in force between the access seeker of the service and Telecom

Access provider:	Telecom
Access seeker:	A service provider who seeks access to the service
Access principles:	The standard access principles set out in clause 5
Limits on access principles:	The limits set out in clause 6 and the additional limit of the interests of other service providers who are co-located in the relevant facilities
Initial pricing principle:	Benchmarking against prices for similar services in comparable countries that use a forward-looking cost-based pricing method
Final pricing principle:	TSLRIC
Requirement referred to in section 45 for final pricing principle:	Nil
Additional matters that must be considered regarding application of section 18	Nil

Telecom's unbundled copper local loop network backhaul (Distribution Cabinet to telephone exchange)

Description of service: A service (and its associated functions, including the associated functions of Telecom's operational support systems) that provides transmission capacity in Telecom's network (whether the transmission capacity is copper, fibre, or anything else) between the handover point in Telecom's Distribution Cabinet (or equivalent facility) and the handover point in Telecom's local telephone exchange (or equivalent facility), for the purposes of providing access to, and interconnection with, Telecom's unbundled copper local loop network (including any necessary supporting equipment)

Conditions: Any of the following:

(a) an application for a determination by the access seeker of the service is pending in respect of Telecom's unbundled copper local loop network; or

	(b) a standard terms development process has been initiated under subpart 2A of Part 2 in respect of Telecom's unbundled copper local loop network; or (c) the access seeker of the service is a party to a determination under section 27 that has not expired, or is a party to a standard terms determination under section 30M, in respect of Telecom's unbundled copper local loop network; or (d) an agreement for Telecom's unbundled copper local loop network (or similar unbundled local loop network service) is in force between the access seeker of the service and Telecom
Access provider:	Telecom
Access seeker:	A service provider who seeks access to the service
Access principles:	The standard access principles set out in clause 5
Limits on access principles:	The limits set out in clause 6
Initial pricing principle:	Benchmarking against prices for similar services in comparable countries that use a forward-looking cost-based pricing method
Final pricing principle:	TSLRIC
Requirement referred to in section 45 for final pricing principle:	Nil
Additional matters that must be considered regarding application of section 18	Nil

Statutory requirements for an STD

23. The Commission makes this STD in accordance with sections 30M, 30O, 30P and 30Q of the Act.

24. In this determination, sections 30P(1)(a) and (b) do not apply and, therefore, the Commission has determined the prices in accordance with the applicable initial pricing principles for the Sub-loop Services under section 30P(1)(c).

25. Section 30O specifies the matters to be included in the final STD as follows:

30O Matters to be included in STD: general

(1) A standard terms determination must—

(a) specify sufficient terms to allow, without the need for the access seeker to enter into an agreement with the access provider, the designated access service or specified service to be made available within the time frames specified under paragraph (b); and

(b) state the time frames within which the access provider must make the service available to—

(i) every person who is already an access seeker when the STD is made; and

(ii) every person who becomes an access seeker after the STD is made; and

(c) specify the reasons for the STD; and

(d) specify the terms and conditions (if any) on which the STD is made; and

(e) specify the actions (if any) that a party to the STD must take or refrain from taking.

(2) To avoid doubt, a STD may also include, without limitation, terms concerning any or all of the following matters:

(a) dispute resolution procedures:

(b) the consequences of a breach of the determination (including provision for set-off or withholding rights, or liquidated damages):

(c) suspension and termination of the service:

(d) procedures for, or restrictions on, assignment of the service.

(3) The Commission must identify which of the terms (if any) specified in a STD are allowed to be varied, on an application made under section 30V by a party to that determination, under a residual terms determination.

Timeframe for supply to Access Seekers

26. The Commission is required by section 30O(1)(b) to specify in the STD the timeframes within which the Access Provider must make the service available to:

- every person who is already an Access Seeker at the time the STD is made; and
- every person who becomes an Access Seeker after the STD is made.

27. The timeframes within which Telecom must make the Sub-loop Services available are contained in the Implementation Plan in Appendix A.

Telecom as an Access Provider

28. Consistent with previous STDs, the Commission's view remains that, in respect of Telecom as the Access Provider of the Sub-loop Services, the Act does not contemplate that the Access Provider and Access Seeker are the same organisation.

29. The Commission maintains its view as outlined in previous STDs that:

- Telecom, defined broadly as the Telecom Corporation of New Zealand (which includes Chorus), is the Access Provider in relation to the Sub-loop Services;

- Operational Separation does not establish Telecom business units as separate legal entities. This would only be achieved by structural separation or subsequent sale of a business unit;

- the Commission consults interested parties if they are materially affected by a change under the STD and if necessary may consult specifically with a Telecom business unit even though it is not an Access Seeker under the Act; and

- the scheme and purpose of the Act support the view that an Access Seeker and an Access Provider cannot concurrently be the same legal entity.

30. In its submission accompanying the STP, Telecom (Chorus) submitted that while it does not seek to relitigate this decision, it considered that Telecom's business units must be treated as if they were Access Seekers. Telecom stated that where the STP terms outline how the rights of various parties are to be determined, it is useful to be explicit that Telecom business units are subject to the same rules as Access Seekers.[11] For this purpose, Telecom defined the term "Other Service Provider" in the General Terms to include both other Access Seekers and Telecom business units (excluding Chorus).

31. Orcon, Kordia, and CallPlus submitted that addition of the term "Other Service Provider" as set out in Telecom's STP essentially tries to circumvent the Commission's previous decision in other STDs that Telecom is not an Access Seeker.[12]

32. The Commission has removed the reference to Telecom business units from the definition of "Other Service Provider" in the General Terms in order to preserve the distinction in the Act between Access Seekers who may seek access to the Sub-loop Services under the STD and other business units within Telecom who may not. There are no benefits in retaining this definition when the STD does not explicitly provide for Telecom (Wholesale) to be bound by the STD in its own right. Furthermore, this decision ensures consistency between this STD and previous STDs.

33. While Telecom (Wholesale) may not seek access to this STD under section 30S of the Act, Telecom can still provide itself with the service, and do so in a manner that is consistent with all terms and conditions in this STD through the application of the following principles:

- standard access principle 3 under subpart 1 of Part 1 of Schedule 1 of the Act; and

[11] Telecom, *Standard terms proposal for Telecom's sub-loop services*, 27 June 2008, p 6, para 14.
[12] Orcon, Kordia and CallPlus, *Submission in response to Telecom's Standard Terms Proposal for the Sub-loop Services*, 18 July 2008, para 38.

- equivalence of inputs (EOI, as defined in 1.2 of the Separation Undertakings) once implemented for the Sub-loop Services.

34. The implementation of the Separation Undertakings (including full EOI under Part 2A of the Act) complements the operation of standard access principle 3. Standard access principle 3 requires that Telecom must deliver the service to itself and the Access Seeker on the basis of consistent non-price terms and conditions prior to the implementation of EOI.

35. Once EOI in the Separation Undertakings is in place, Telecom (Wholesale) may access the same service and the same terms and conditions (including price, service levels and delivery times) as those that are available to Access Seekers under this STD. Accordingly, Telecom (Wholesale) and Access Seekers will be treated on the same price and non-price terms in relation to the Sub-loop Services once EOI is in place.

36. While references are made to Telecom (Chorus), Telecom (Wholesale) and Telecom (Group) when describing submissions from these parties in this decision report, this does not change the position that Telecom business units are not considered to be Access Seekers or Other Service Providers in relation to this STD.

Access principles and limits on those principles

37. Clauses 5 and 6 of Schedule 1 to the Act apply in relation to the Sub-loop Services. They provide:

5 Standard access principles for designated access services and specified services

The following standard access principles apply to designated access services and specified services:

(a) *principle 1*: the access provider must provide the service to the access seeker in a timely manner:

(b) *principle 2*: the service must be supplied to a standard that is consistent with international best practice:

(c) *principle 3*: the access provider must provide the service on terms and conditions (excluding price) that are consistent with those terms and conditions on which the access provider provides the service to itself:

(d) *principle 4*: the access provider must, if requested, provide an access seeker with information about a designated access service or specified service at the same level of detail, and within the same time frame, that the access provider would provide that information had it been requested by one of its own business units.

6 Limits on application of standard access principles set out in clause 5

(1) Principles 1 to 4 set out in clause 5 are limited by the following factors:

(a) reasonable technical and operational practicability having regard to the access provider's network:

(b) network security and safety:

(c) existing legal duties on the access provider to provide a defined level of service to users of the service:

(d) the inability, or likely inability, of the access seeker to comply with any reasonable conditions on which the service is supplied:

(e) any request for a lesser standard of service from an access seeker.

(2) Principle 4 set out in clause 5 –

(a) does not extend to any information about identifiable individual customers of the access provider; and

(b) is subject to the requirement that any confidential information provided to the access seeker, in accordance with that principle, must be kept confidential to that access seeker.

Compliance with standard access principle 3

38. Clause 2.3 of the Sub-loop Service General Terms incorporates the access principles and the limits on those access principles from clauses 5 and 6 of Schedule 1 to the Act.

39. Access principle 3 requires that Telecom provide the Sub-loop Services on terms and conditions (excluding price) that are consistent with those terms and conditions on which it provides the service to itself.

40. On 26 September 2007 the Minister of Communications made the Telecommunications (Operational Separation) Determination 2007 (**Operational Separation Determination**). This provides further requirements with which the separation plan under Part 2A of the Act must comply and are in addition to those requirements in section 69D of the Act. Clause 9 of the Operational Separation Determination states that:

In this determination, unless the context otherwise requires, **equivalence of inputs** or **EOI**—

(a) means that, if Telecom is required to provide a relevant service to an access seeker,—

(i) Telecom must provide the access seeker and Telecom itself with the same service; and

(ii) Telecom must deliver that service to the access seeker and to Telecom itself on the same timescales and on the same terms and conditions (including price and service levels); and

(iii) Telecom must deliver that service to the access seeker and to Telecom itself by means of the same systems and processes (including operational support processes); and

(iv) Telecom must provide the access seeker and Telecom itself with the same commercial information about those services, systems, and processes; and

(b) includes, if Telecom is required to provide a relevant service to an access seeker, the use by Telecom of services, systems, and processes that access seekers must be able to use in the same way, and with the same degree of reliability and performance, as those services, systems, and processes are used by Telecom; and

(c) is subject to clause 8.

41. On 31 March 2008 the Minister approved Telecom's Separation Undertakings (**Separation Undertakings**)[13], with the Separation Day defined as 31 March 2008. The Separation Undertakings define "Equivalence of Inputs" (**EOI**) in clause 1.2.

42. The Commission considers that the implementation of the Separation Undertakings including full EOI under Part 2A of the Act complements the operation of standard access principle 3. That is, when services are provided on an EOI basis Telecom must deliver the service to itself and the Access Seeker on the same time-scales and on the same terms and conditions (including price and service levels).[14] As the services are migrated towards equivalence, those services will be provided on the basis of consistent non-price terms in accordance with standard access principle 3.

43. Prior to the implementation of EOI, Telecom's internal service provision can be compared at any time with the service provided to Access Seekers to check for consistency in the non-price terms and conditions, for example in relation to Service Level Terms (**SLTs**).[15]

44. Section 21 of the Separation Undertakings requires Telecom to propose a migration plan to be approved by the Commission, which sets out how and when the Sub-loop Services will be migrated to the EOI standard if the EOI standard is not immediately achievable.

Information disclosure

45. As clause 2.3 of the Sub-loop Services General Terms incorporates the access principles, the Commission may require Telecom, in accordance with section 69ZC, to prepare and disclose information about the operation and behaviour of any part of its business that provides prescribed specified or designated services, such as the Sub-loop Services.

46. In addition, the Commission may require Telecom to adopt, in the preparation or compilation of that information, any methodology that the Commission requires. The Commission may also require other information disclosure as further set out in section 69ZC of the Act. The purpose of such disclosure is specified in section 69ZC(1)(b) as follows:

> (b) for the purpose of enabling monitoring of, and facilitating compliance with, prescribed access principles –
>
> > (i) that are incorporated in any determination, approved code, or registered undertaking; and
> >
> > (ii) with which the access provider is required to comply.

[13] Telecom, *Telecom Separation Undertakings: As provided to the Minister of Communications on 25 March 2008 in accordance with section 69K(2)(c) of the Telecommunications Act 2001*, 25 March 2008.
[14] Refer to clause 1.2 of the Operational Separation Undertakings.
[15] In accordance with section 69ZC of the Act as discussed below.

47. At this stage the Commission does not intend to seek information disclosure pursuant to section 69ZC as part of this determination, but may do so in the future.

Relativity

48. Telecom's unbundled copper local loop service in subpart 2 of Part 1 of Schedule 1 of the Act requires the Commission as part of the application of section 18 to consider the relativity between this service and Telecom's UBA Service (to the extent that the terms and conditions have been determined for that service). In the context of Sub-loop Services STD, the Commission must consider relativity between the Sub-loop UCLL Service and Telecom's UBA Service which is governed by the UBA STD[16]. The relativity between these services is discussed in paragraphs 504 to 531.

Amendments to an STD

49. The Act provides a range of mechanisms to amend an STD including:

- a review under section 30R;
- a Residual Terms Determination (RTD) under section 30ZB;
- a pricing review determination under section 51;
- a clarification under section 58; and
- a reconsideration under section 59.

50. Section 30R allows the Commission, on its own initiative, to commence a review at any time of all or any of the terms of an STD. After review, the Commission may replace an STD, or vary, add, or delete any of its terms, if it considers it necessary to do so. The review can also address aspects of a service not covered in an initial STD and update the terms of an STD to reflect regulatory or technological change.

51. Apart from the requirements in section 30R, the Commission may conduct the review in a manner and within a timeframe as the Commission thinks fit. This enables the Commission to assess the appropriate form and degree of consultation on a case by case basis.[17] The Commission will give notice in the *New Zealand Gazette*. The Commission expects that if there is unanimous agreement in the TCF for a particular change, the consultation process is likely to be very short and completed quickly.

Variation of terms under a residual terms determination

52. The Commission is required by section 30O(3) of the Act to identify which of the terms (if any) specified in an STD may be varied on an application for a

[16] Commerce Commission, *Decision No. 611: Standard Terms Determination for the designated service Telecom's unbundled bitstream access*, 12 December 2007.
[17] This can be contrasted with the process under section 59(3) of the Act which requires that a reconsideration determination follow the same process as followed for the initial determination.

RTD made under section 30V. The purpose of an RTD is to allow the Commission to adjust the terms for the supply of a designated access service or specified service that are specified in the STD.[18]

53. An RTD is another regulatory instrument that allows the Commission to address matters that were not addressed in the STD and vary any terms that the Commission has identified under section 30O(3) as being allowed to be varied.[19] An application for an RTD may only be made where an STD is in place and it may seek either or both of the following:

- a determination of matters that were not addressed in the STD; or
- a variation of any terms in the STD that the Commission has identified under section 30O(3) as being allowed to be varied.

54. From a policy perspective, an RTD is a regulatory alternative to a private bilateral agreement in situations where an Access Seeker had made reasonable attempts to negotiate with the Access Provider on the terms in question but was unable to reach agreement on those matters.

55. In addition, an RTD provides a mechanism for an Access Seeker to seek changes to the STD that may only apply on a bilateral basis between the Access Seeker and the Access Provider. Advantages of a RTD are that it may lead to a more urgent regulatory response to resolve disputes between parties on a bilateral basis and avoid the need for generic changes to an STD applying to all parties.[20]

56. In previous STDs, the Commission proposed that a number of terms should not be able to be varied for the purposes of an RTD.

57. In the context of the Sub-loop Services, the Commission has reconsidered the application of section 30O(3) in the context of what variations (if any) are likely to give best effect to section 18 of the Act. The relevant starting point is that consumers would be best served with maximum flexibility, and accordingly all terms should be variable for the purposes of an RTD unless there is good reason otherwise.

58. However, in some areas certainty outweighs flexibility. The Commission considers that some terms of the Sub-loop Services STD must not be varied by an RTD. In addition, terms should not be able to be varied if to do so would undermine the scheme and purpose of the Act. For example, the Sub-loop Services Price Lists require certainty as to what the prices will be for core charges, and the process for updating those charges.

59. On this basis the Commission has determined that all terms may be varied for an RTD application made under section 30V by a party to the Sub-loop Services STD, apart from those listed below:

---

[18] Section 30U(1) of the Act.
[19] Section 30U(2) of the Act.
[20] Other amendments to an STD can occur via other provisions such as pricing under section 42 of the Act.

Sub-loop Services General Terms:

a) Section 2 – Guiding Principles;
b) Clause 7.3 – Rights not excluded;
c) Clause 7.4 – Amendment ;
d) Clause 9.1 – (in section 9 – Change Mechanism for any Sub-loop Services Operations Manual and any Sub-loop Services Service Level Terms);
e) Section 36 – Dispute Resolution; and
f) Section 44 – Change mechanism for Interference Management Plan;

Service Appendix 1, Schedule 1 Sub-loop UCLL Service Description:

g) Clause 1.2 (in section 1 – Introduction);

Service Appendix 1, Schedule 2 Sub-loop UCLL Price List:

h) Sub-loop UCLL Service Transaction Charges, service components 1.1 to 1.3, and 1.8; and
i) Sub-loop UCLL Service Recurring Charges, service components 2.1 and 2.2;

Service Appendix 2, Schedule 1 Sub-loop Co-location Service Description:

j) Clause 1.2 (in section 1 – Introduction);

Service Appendix 2, Schedule 2 Sub-loop Co-location Price List:

k) Sub-loop Co-location Service Recurring Charges, service components 2.1 and 2.3;

Service Appendix 3, Schedule 1 Sub-loop Backhaul Service Description:

l) Clause 1.2 (in section 1 – Introduction);

Service Appendix 3, Schedule 2 Sub-loop Backhaul Price List:

m) Sub-loop Backhaul Service Transaction Charges, service components 1.1 and 1.6; and
n) Sub-loop Backhaul Service Recurring Charges, service components 2.1 to 2.3;

Implementation Plan:

o) All sections and clauses in the Implementation Plan.

Breach of an STD

60. The Sub-loop Services STD provides a range of dispute resolution procedures.[21] However, the STD does not prevent any party from seeking remedies available to it under the Act.[22]

61. Under section 156N(b) of the Act, an STD is an enforceable matter. As such, Telecom and/or the Access Seeker may make a written complaint to the Commission alleging a breach of the STD. The Commission must then decide

[21] See section 36 of the Sub-loop Services General Terms.
[22] See clause 36.14 of the Sub-loop Services General Terms.

what action, if any, to take, including whether to take action in the High Court.[23] Telecom and/or the Access Seeker may also take action in the High Court under section 156P(1) of the Act.

62. On the application of the Commission, the High Court may, in addition to any other remedies, order a pecuniary penalty if there has been a breach of the STD.

[23] See sections 156O, 156P, 156Q and 156R of the Act.

SERVICE DESCRIPTIONS

Overview

63. The Sub-loop Network refers to Telecom's copper network as it relates to the connection of local loops between the End User's building (or, where relevant, the building distribution frames) to the handover point in a Distribution Cabinet (including any relevant line in the Distribution Cabinet).

64. The Sub-loop Services provide Access Seekers with access to, and interconnection with, the Sub-loop Network. The Sub-loop Services include:

- the Sub-loop UCLL Service, which provides access to the copper loops between the End User's building and the Distribution Cabinet;
- the Sub-loop Co-location Service, which allows Access Seekers to install equipment in Telecom's Distribution Cabinets in order to deliver services over the Sub-loop UCLL Service; and
- the Sub-loop Backhaul Service, which provides transmission capacity between the Distribution Cabinet and the Local Exchange.

65. Access Seekers may choose to combine the Sub-loop UCLL Service with the Sub-loop Co-location Service, the Sub-loop Backhaul Service and the UCLL Backhaul Service[24] in order to provide end-to-end services to End Users.

Sub-loop UCLL Service

66. The Sub-loop UCLL Service is described in Appendix A: Service Appendix 1, Schedule 1 – Sub-loop UCLL Service Description, as follows:

> The Sub-loop UCLL Service (and its associated functions, including the associated functions of Telecom's operational support systems) is a service that enables access to, and interconnection with, the Sub-loop Network.

67. The Sub-loop Network is defined in the Sub-loop Services General Terms as Telecom's copper network as it relates to the connection of local loops between the external termination point (ETP) at the End User's premises and the handover point on the distribution frame in a Distribution Cabinet (including any relevant line in the Distribution Cabinet).

68. The Sub-loop UCLL Service Description provides that Sub-loop UCLL Service comprises the Sub-loop MPF Service and the Sub-loop Tie Cable Service. The Sub-loop MPF Service entails provision of access to the Sub-loop MPF, which is a circuit comprising a pair of twisted copper conductors between the ETP at the End User's premises and the Distribution Cabinet distribution frame.

69. Where the Access Seeker equipment is not located at the Distribution Cabinet (but rather, is remotely located), a Sub-loop Tie Cable Service is available under

[24] Commerce Commission, *Decision No. 626: Standard terms determination for the designated service Telecom's unbundled copper local loop network backhaul (telephone exchange to interconnect point)*, 27 June 2008.

the terms of this determination to enable interconnection of the Access Seeker's equipment with the distribution frame.

70. The Sub-loop MPF Service and Sub-loop Tie Cable Service are illustrated in Figure 1 and Figure 2, respectively.

Figure 1: The Sub-loop MPF Service

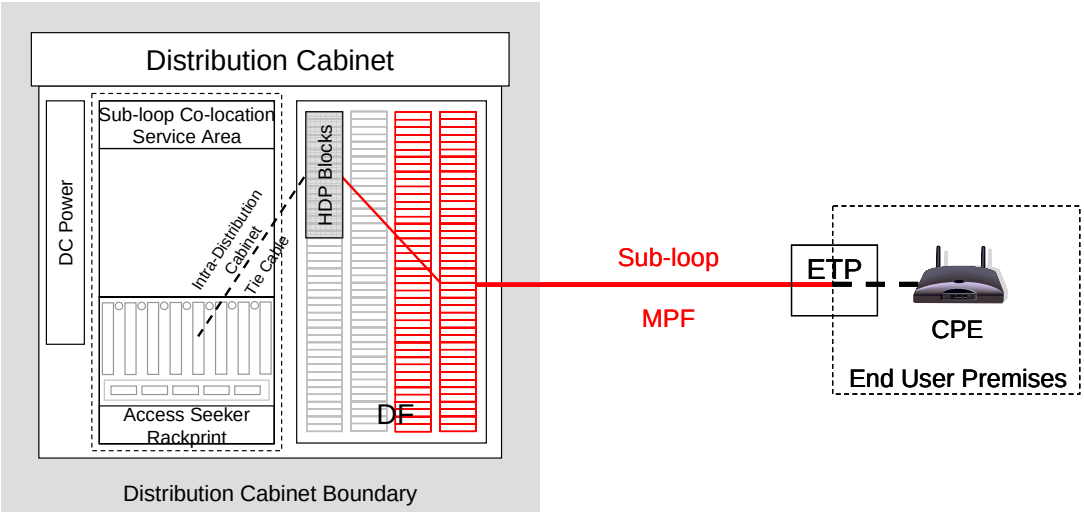

CPE = Customer Premises Equipment (including modem)
Red = Sub-loop MPF Service
Source: Commerce Commission, 2009

Figure 2: The Sub-loop MPF Service and Sub-loop Tie Cable Service

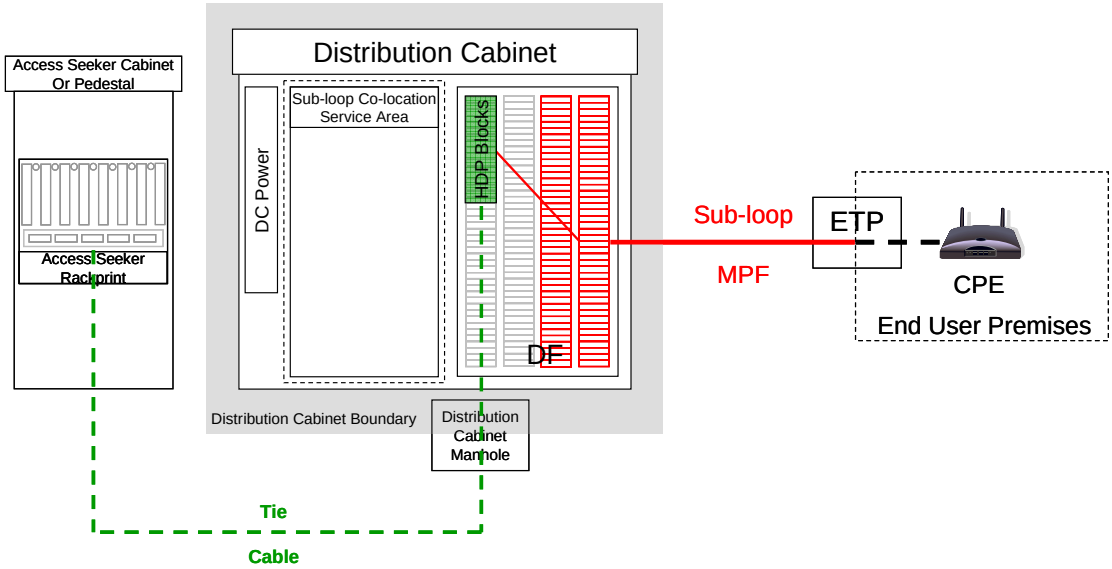

CPE = Customer Premises Equipment (including modem)
Red = Sub-loop MPF Service
Green = Sub-loop Tie Cable Service
Source: Commerce Commission, 2009

Sub-loop Co-location Service

71. The Sub-loop Co-location Service is described in Appendix A: Service Appendix 2, Schedule 1 – Sub-loop Co-location Service Description, as follows:

> The Sub-loop Co-location Service (and its associated functions, including the associated functions of Telecom's operational support systems) is a service that provides co-location facilities for Access Seeker Equipment, and access to the handover point, at the Distribution Cabinet for the purposes of providing access to, and interconnection with, the Sub-loop Network.

72. The Sub-loop Co-location Service includes access to, and the use of, space in, on, or around the Distribution Cabinet for the purposes of installing and maintaining Access Seeker Equipment within its Rackprint.

73. The Access Seeker is only able to purchase the Sub-loop Co-location Service where that Access Seeker is also purchasing the Sub-loop UCLL Service. The Access Seeker may additionally purchase the Sub-loop Backhaul Service (or use the Access Seeker's own network or wholesale services provided by other providers) to deliver a service to End Users.

74. The Sub-loop Co-location Service is illustrated in Figure 3 below.

Figure 3: The Sub-loop Co-location Service

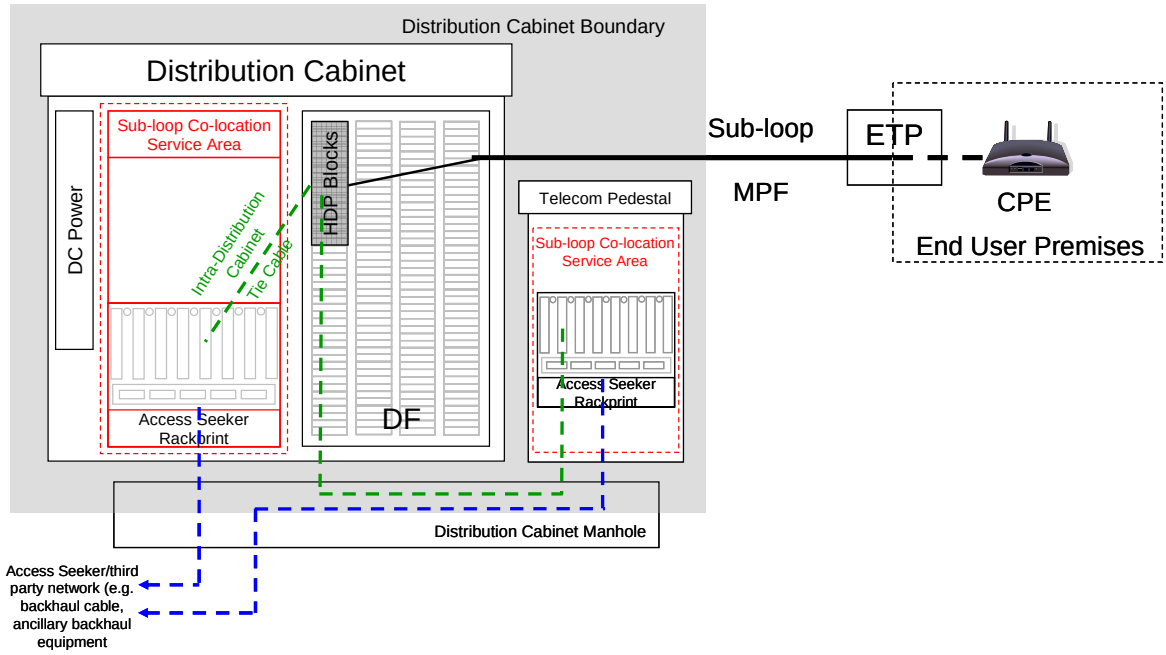

Red = Sub-loop Co-location Service Area (excluding optional tie cables)
Blue = Sub-loop Co-location External Tie Cable
Green = Intra-Distribution Cabinet Tie Cable
Source: Commerce Commission, 2009

Sub-loop Backhaul Service

75. The Sub-loop Backhaul Service is described in Appendix A: Service Appendix 3, Schedule 1 – Sub-loop Backhaul Service Description, as follows:

> The Sub-loop Backhaul Service (and its associated functions, including the associated functions of Telecom's operational support systems) is a service that provides transmission capacity in Telecom's Network between the Distribution Cabinet Handover Point and the Local Exchange Handover Point for the purposes of providing access to, and interconnection with, the Sub-loop Network.

76. The Handover Points for the Sub-loop Backhaul Service are:

- the Distribution Cabinet Handover Point, which is the OFDF (or equivalent facility) in the Distribution Cabinet; and
- the Local Exchange Handover Point, which is the OFDF in the Local Exchange Co-location Service Area.

77. The Sub-loop Backhaul Service is illustrated in Figure 4 below.

Figure 4: The Sub-loop Backhaul Service

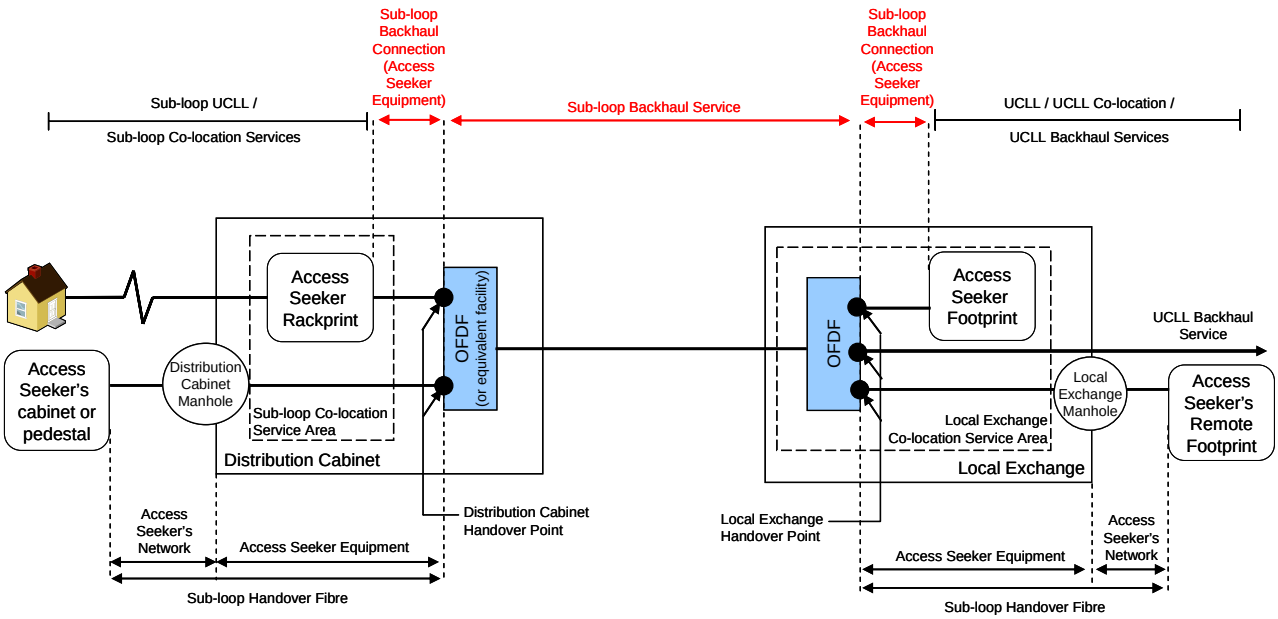

Source: Commerce Commission, 2009

78. Although the legislative service descriptions for the Sub-loop Backhaul Service and the UCLL Backhaul Service are very similar, the Commission considers that in order to best give effect to section 18 of the Act, these descriptions must be interpreted based on the practicalities of delivery of the services.

79. As discussed further in paragraphs 222 to 236, Telecom (Chorus) indicated that it intends to provide the Sub-loop Backhaul Service using *dedicated* fibre (i.e., separate fibre for each unique Sub-loop Backhaul Service) and ports on a Telecom-owned media converter or Ethernet switch in the Exchange.[25] Under such a service, bandwidth is unlikely to be a significant driver of cost up to 1 Gbps given that the same fibre resource is required regardless of bandwidth and the active equipment costs are similar (or even higher for smaller bandwidths of 25 Mbps and 50 Mbps).

[25] Telecom (Chorus), *Letter responding to the Commerce Commission's request in regard to the draft Sub-loop Services STD*, 28 November, p 2-3; Sub-loop Services Conference, *Transcript*, 8 December 2008, p 128-130.

80. Accordingly, the Commission has determined that there should only be a single bandwidth option of 1 Gbps. In comparison, the UCLL Backhaul Service provides multiple bandwidth options of 100 Mbps and 1 Gbps.

PRICE TERMS - CORE CHARGES

81. In this STD, the Commission sets out the core charges for the Sub-loop UCLL Service, the Sub-loop Co-location Service and the Sub-loop Backhaul Service. For each of these services, the Commission is required to determine the price terms according to the IPP set out in the Act, which is:

> Benchmarking against prices for similar services in comparable countries that use a forward-looking cost-based pricing method.

82. The following sections summarise:

- the approach taken by the Commission in the draft STD in applying the IPP for each of the Sub-loop Services;
- the submissions from parties on the draft STD; and
- the Commission's final decision in light of the submissions.

PRICE TERMS – SUB-LOOP MPF CORE CHARGES

Introduction

83. This section sets out the key decisions that the Commission has made in relation to the core charges for the Sub-loop UCLL Service. Of particular significance is the Sub-loop MPF recurring charge. A summary of submissions on core charges is set out in Appendix B.

Recurring Monthly Rental Charge

Approach set out in the draft STD

84. In the draft STD, the Commission noted that the Sub-loop MPF Service provides a copper connection between the premises of the End User and the distribution frame within the Distribution Cabinet. The draft STD compared the Sub-loop MPF Service with the full UCLL MPF Service, as illustrated in the following figure.

Figure 5: Sub-loop MPF and full UCLL MPF services

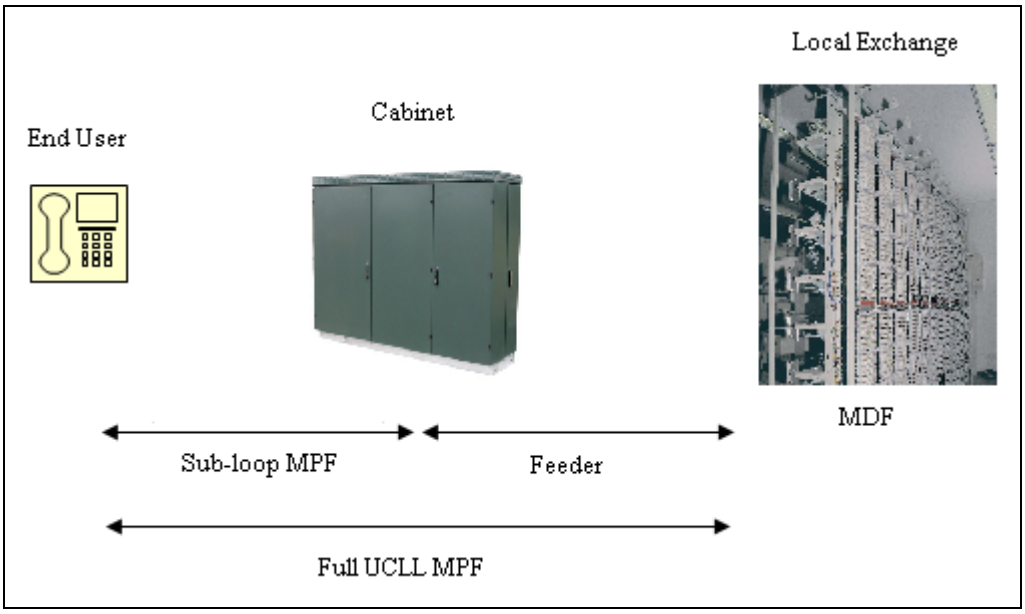

Source: Commerce Commission, 2009

85. The Commission commented in the draft STD that the cost of the Sub-loop MPF Service is likely to be less than the cost of the UCLL MPF Service, as distance is an important driver of the cost of deploying loops due to the significance of trenching costs. The Commission estimated the average length of the Sub-loop MPF Service to be approximately 0.5 km (or 17% of the average full UCLL MPF), and the average distance between the Distribution Cabinet and Local Exchange to be around 2.5 km (83%).

86. In the draft STD the Commission referred to other factors that indicate that the cost of the Sub-loop MPF will be a relatively high proportion of the cost of the full UCLL MPF. In particular, the greater economies of scale available in the feeder network between the Exchange and the Distribution Cabinet results in a

lower average trenching cost per line, whereas in the distribution portion of the network (between the Distribution Cabinet and the End User), the average deployment cost per km will be relatively high. This will increase the proportion of total loop costs that lie between the Distribution Cabinet and the End User's premises (i.e., the Sub-loop MPF).

87. In the draft STD, the Commission noted that cost-based Sub-loop MPF rentals had been set in a number of European jurisdictions (where a single, averaged rate was typically set by each regulator), as well as in a number of US states (where rates were typically de-averaged across between 3 and 5 pricing zones in each state). The initial set of cost-based sub-loop rates identified by the Commission in the draft STD consisted of 101 observations.[26]

88. The Commission considered several possible benchmarking approaches to set the recurring monthly rental for the Sub-loop MPF Service.

89. The first approach was to follow the same methodology the Commission used to set the full UCLL rental.[27] This involved assessing those jurisdictions in which UCLL service were available, against a number of criteria relating to the IPP. In the UCLL STD, this resulted in 10 jurisdictions that were considered comparable to New Zealand, with a median averaged UCLL rate of NZ$24.29 per month.[28]

90. In the draft Sub-loop STD, the Commission noted that cost-based Sub-loop MPF rates were available for only 6 of the 10 comparable jurisdictions used to determine the UCLL MPF recurring charge,[29] and so the resulting median Sub-loop MPF rate was likely to be inconsistent with the median UCLL rate.[30] For example, the median Sub-loop rental of $25 per month exceeded the median UCLL rental of $24.29 per month.[31]

91. In addition, in 5 of the 6 jurisdictions where Sub-loop MPF rates were available, the rates were de-averaged according to 3 geographic zones. The absence of line counts in each of these zones meant that the Commission could not calculate a state-wide weighted average sub-loop rate for those jurisdictions, which prevented the use of this methodology for the Sub-loop MPF service.[32]

---

[26] These included 7 jurisdictions in Europe and 94 price observations from 30 US states. The Commission excluded those jurisdictions (Norway and the UK) where the sub-loop price equalled or exceeded the full UCLL price.

[27] Commerce Commission, Decision No. 609: *Standard terms determination for the designated service Telecom's unbundled copper local loop network*, 7 November 2007.

[28] This rate was then de-averaged, to produce UCLL rates for urban and non-urban areas of NZ$19.84 and $36.63, respectively.

[29] Of the ten jurisdictions that were found to be comparable to New Zealand for the purposes of determining a cost-based UCLL price, cost-based sub-loop rates are not available in Norway, Finland, or Australia. The Commission also noted it was unable to identify a sub-loop rate for the state of Kansas.

[30] Commerce Commission, *Draft STD for the Sub-loop Services*, 5 September 2008, paragraph 114.

[31] The Commission noted that the higher Sub-loop rental was likely to be explained by the over-representation of relatively high non-urban rates in the US. As noted below, the absence of US sub-loop line distribution data prevented the Commission from determining state-wide average Sub-loop prices in the draft STD.

[32] Commerce Commission, *Draft STD for the Sub-loop Services*, 5 September 2008,, paragraphs 111-113.

92. The second approach considered by the Commission in the draft STD was to directly benchmark the sub-loop rate by taking the median rate of the entire set of 101 cost-based sub-loop prices. The Commission's concern with this approach was that in benchmarking a price directly, it again relied on a different sample set from that used for the full UCLL service, and may therefore result in a Sub-loop MPF price that is too low or high, relative to the full UCLL price.

93. To illustrate this concern, the draft STD noted that if Ireland was the only country with a LRIC-based sub-loop price, the resulting benchmarked price of $27.72 per month would be above the full UCLL price $24.29 per month determined in the UCLL STD. This would be despite the Sub-loop MPF being a component of the full UCLL service (and despite the Sub-loop price in Ireland being less than the full UCLL price in Ireland).

94. The Commission also noted that this approach would not place any weight on the meaning of "comparability", which is one component of the IPP that the Commission considers when striving to apply the plain and ordinary meaning of the IPP.

95. The final approach considered in the draft STD, and the one adopted by the Commission, was to benchmark the *ratio* of the Sub-loop MPF and full UCLL rentals in each jurisdiction where cost-based Sub-loop Services are available. The Commission considered that this approach would result in a sub-loop price that is consistent with the UCLL price, as the ratio of these two prices in each jurisdiction is used. Such an approach also takes advantage of a relatively large dataset of sub-loop prices.

96. The median observation of the 101 Sub-loop MPF/UCLL MPF price ratios was 60.4%. This ratio was applied to the full UCLL rate that was previously determined by the Commission (which was explicitly based on comparability). The resulting rates are summarised in Table 1.

Table 1: Summary of Sub-loop MPF Monthly Rentals in Draft STD

	Average	Urban	Non-urban
Full UCLL rental	$24.29	$19.84	$36.63
Benchmarked ratio	60.4%	60.4%	60.4%
Sub-loop MPF rental	$14.68	$11.99	$22.14

Source: Commerce Commission, 2009

97. The Commission considered that as the Sub-loop MPF price was based on a ratio applied to the full UCLL price, with this ratio reflecting the relative cost of the two services,[33] the sub-loop price was set at an appropriate relativity to the full UCLL price. The Commission had previously satisfied itself of the relativity between the full UCLL service and the UBA service. Hence, by

[33] That is, the cost of the Sub-loop MPF service represents 60.4% of the cost of the full UCLL MPF service.

definition, the sub-loop price was likely to have been set at an appropriate relativity with the UBA price (which is a requirement of the Act).

Consideration of submissions

98. A number of parties supported the approach proposed in the draft STD, including Vodafone, Covec, and Orcon/Kordia/CallPlus. Submissions from and on behalf of Telecom (Group) and Telecom (Chorus) disagreed with the approach proposed in the draft STD, and instead recommended that the methodology used by the Commission in the UCLL STD be applied to the Sub-loop UCLL Service.[34]

99. Telecom (Chorus) raised a number of issues with the benchmarking approach taken in the draft STD.[35] The Commission has considered each of the arguments raised by Telecom (Chorus).

100. First, Telecom (Chorus) argued that the sample used by the Commission in the draft STD includes a large number of jurisdictions which in the UCLL STD were not regarded as being comparable to New Zealand.

101. Before responding to this point the Commission considers that it is important to make a number of general points about the application of the IPP in this case. The Commission notes that the draft STD proposed benchmarking the Sub-loop MPF prices as a ratio of the UCLL MPF prices, rather than the Sub-loop MPF prices in dollar terms. The Commission considers that benchmarking a ratio satisfies the plain and ordinary meaning of the IPP as a benchmark can be defined in terms of a proportion or ratio of a price. In other words, the Commission considers that it is benchmarking against prices of Sub-loop MPF services in other countries, and that the unit of measurement of the benchmark prices is the proportion of the Sub-loop MPF price compared to the UCLL price, rather than dollar values.

102. The price ratio approach satisfies the similar services component of the IPP, as the Sub-loop MPF Service represents that part of the UCLL MPF Service between the End User and the Distribution Cabinet, and the forward-looking cost-based component as the Sub-loop MPF and UCLL MPF benchmarks are cost-based rates. The issue, however, is whether the benchmarked ratio satisfies the comparability criteria. This is discussed further below.

103. The Telecom (Chorus) argument around comparability may have had some validity if it was shown that the *ratio* of prices was significantly influenced by the comparability criteria used in the UCLL STD (which were based on the likely cost drivers of the UCLL *price*). However, in its cross-submission, Covec concluded that:[36]

[34] In its cross-submission, Vector submitted that the Commission should benchmark sub-loop prices rather than ratios, as this is consistent with the IPP. Vector, *Cross-submission on the draft Sub-loop Services STD*, 31 October 2008, paragraph 7.
[35] See paragraph 872 below.
[36] Covec, *Access to Sub-loop Services: Cross-submission*, 30 October 2008, page 17.

there is no statistical evidence of a "systematic difference" in the proportion of sub-loop prices to full loop prices across comparable compared to non-comparable jurisdictions.

104. The Commission considers that Covec's submission indicates that the criteria used by the Commission to identify comparable jurisdictions for the purposes of determining the UCLL price are not as relevant for establishing comparability in respect of the price ratio.

105. This is also evident from an assessment of Sub-loop MPF/UCLL MPF price ratios in the US, where prices are set on a geographically de-averaged basis. In the US, individual states have distinct pricing zones. For example, most states typically have three pricing zones, with prices in urban areas ("zone 1") lower than prices in more rural areas ("zone 3").[37]

106. The prices for full UCLL (and Sub-loop UCLL) services vary significantly within a particular state, depending on factors such as population density. For example, in Alabama, the zone 1 UCLL price is US$12.58 per month, while the zone 3 UCLL price is $34.34 per month. In the UCLL STD, the Commission found that where de-averaged prices had been set, the UCLL prices in urban areas were on average approximately 13% below the average price, while UCLL prices in non-urban areas were 60.5% above the average price.[38]

107. However, in the draft sub-loop STD, the Commission noted that there was little variation in the *ratio* of Sub-loop MPF/UCLL MPF prices across the pricing zones in the US.[39] In states with 3 pricing zones, this ratio varied from 59% to 61%, indicating that the sub-loop accounted for approximately the same proportion of full loop costs in urban and non-urban areas. This suggests that factors such as population density do not have a significant influence on this ratio.

108. In response, LECG argued that there is a wide range of Sub-loop MPF/UCLL MPF price ratios within each price zone in the US. For example, the zone 1 ratio varies from 16.9% in Massachusetts, to 89.1% in Alabama. However, the Commission considers that the *distribution* of ratios in each zone is more informative than LECG's comparison of the maximum and minimum ratios. Looking at those states that use 3 geographic pricing zones,[40] Figure 6 shows the distribution of price ratios. While a relatively small number of more extreme observations results in the wide ranges reported by LECG, the majority of ratios lie within a relatively tight distribution, with a 25th percentile of 55%, and a 75th percentile of 65%. The Commission found similar distributions for the other pricing zones.

---

[37] Some states have 4 or 5 pricing zones.

[38] Commerce Commission, Decision No. 609: *Standard terms determination for the designated service Telecom's unbundled copper local loop network*, 7 November 2007, paragraph 260.

[39] Commerce Commission, *Draft STD for the Sub-loop Services*, 5 September 2008, paragraph 127.

[40] As noted by LECG, the definition of price zones across different US states will tend to differ. Such differences may be reduced by focusing only on those states with 3 price zones (as zone 3 in a state with 5 zones is likely to differ from zone 3 in a state with 3 zones). The Commission notes that it has conducted a similar analysis where all the states are included (as per LECG's cross-submission, Table 1) and found similar results.

Figure 6: Sub-loop MPF/UCLL MPF price ratios, Zone 1

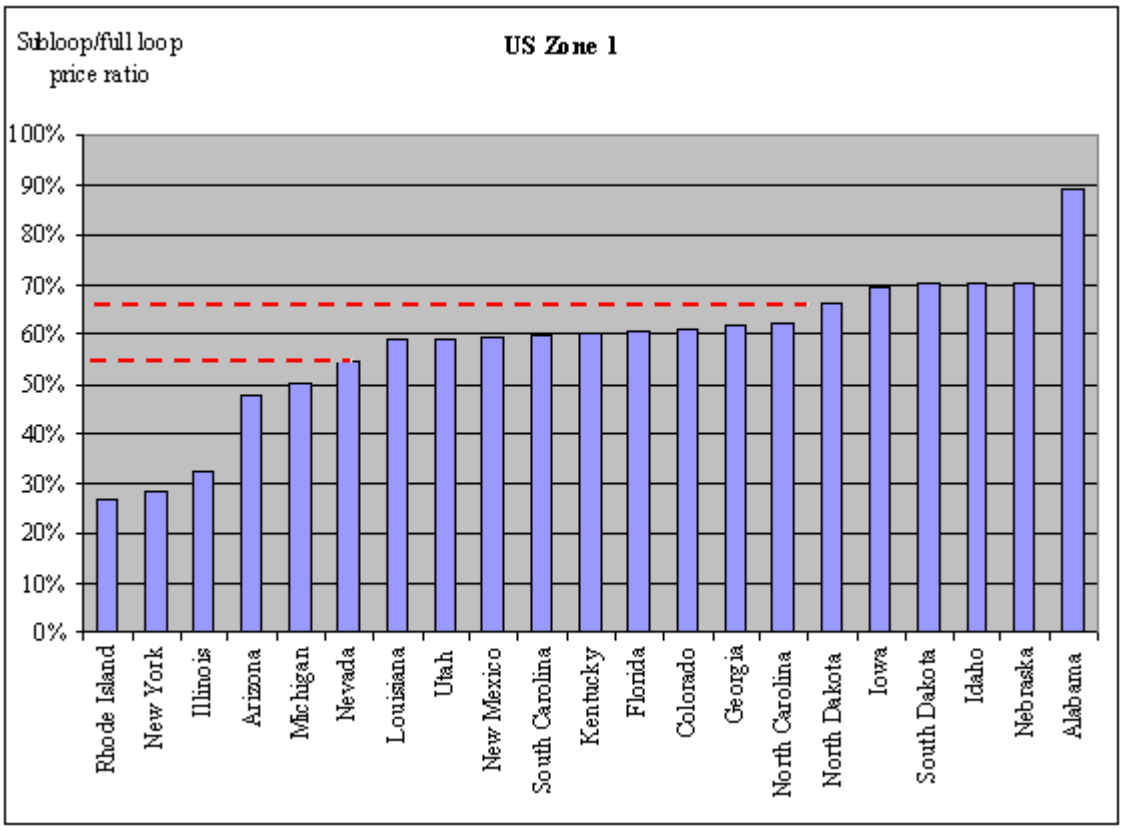

Source: Commerce Commission, 2009 (using rates from AT&T)

109. LECG's cross-submission presents the results of regression analysis that examines whether variations in the ratio of Sub-loop MPF/UCLL MPF prices are explained by the same factors that explain variations in full loop prices. LECG initially tested whether the population density, teledensity, urbanisation, and country variables[41] used by the Commission in the UCLL STD explain the Sub-loop MPF/UCLL MPF ratios. LECG found that urbanisation was not significant, but that the remaining three variables explained a significant amount of variation in the price ratios. According to LECG, the Commission should use the same comparability test when benchmarking the price ratio.

110. However, the Commission notes that in the LECG model, variation in the explanatory variables (population density, teledensity, and the country dummy variable) explain less than 50% of the variation in the sub-loop price ratio.[42] This indicates that potentially significant influences on the sub-loop price ratio have been omitted from LECG's specification.

111. In addition, the coefficients on the population density and teledensity variables have differing signs. As both these variables are measures of density, both

[41] A country "dummy variable" was used to test whether the dependent variable was different in US and non-US jurisdictions.

[42] The adjusted R^2 is 0.4686 where the ratio is the dependent variable. Where LECG use the sub-loop price as the dependent variable, the adjusted R^2 is 0.3792.

variables might be expected to influence the sub-loop ratio in the same direction.[43]

112. As noted in the draft STD, and discussed further above, the ratio of Sub-loop MPF/UCLL MPF prices in the US urban areas (zone 1) is similar to the ratios in the more rural regions (zone 3).

113. The Commission therefore considers that while factors such as population density and urbanisation (which were used in the UCLL STD) are likely to explain UCLL MPF and Sub-loop MPF prices (as is evidenced in the US, where these *prices* are considerably lower in urban areas than in rural areas), these factors do not appear to explain the limited variation in the *ratio* of these prices. For the above reasons the Commission considers each of the jurisdictions to be comparable for the purposes of determining the recurring charge for the Sub-loop MPF Service.

114. Telecom (Chorus)'s second argument against the approach used in the draft STD was that the Commission's approach introduces a downward bias, with the benchmarked ratio of 60.4% being lower than all but one of the comparable jurisdictions. However, in light of the above discussion around the relevance of the comparability criteria used in the UCLL STD, the Commission does not agree that there is a downward bias.

115. The Commission also notes that LECG's proposed monthly sub-loop prices of $20.00 (averaged), $15.38 (urban), and $32.35 (non-urban) are 82%, 78%, and 88%, respectively, of the full UCLL prices set in the UCLL STD. These ratios significantly exceed the range of ratios for the comparable jurisdictions set out in LECG's submission (60.0% to 71.9%).[44] The sub-loop prices proposed by LECG in its cross-submission, where the 75th percentile observations are proposed, result in even higher relative prices.[45] Based on LECG's argument, given the comparable jurisdictions from the UCLL STD, their approach appears to introduce a significant upward bias in the resulting prices.

116. Third, Telecom (Chorus) submitted that the Commission's exclusion of those jurisdictions where the sub-loop price equals or exceeds the full local loop price cannot be justified as a benchmarking issue, and distorts the results.[46]

117. However, as illustrated in Figure 5, the sub-loop is a 'subset' of the full local loop,[47] and it is therefore unlikely that a cost-based Sub-loop MPF rental could

---

[43] It is difficult to know *a priori* how density might influence the sub-loop *proportion* of the full loop. In less densely populated regions, full UCLL prices are typically higher, for example due to longer average loop lengths. In such cases, the fibre run to the cabinet might be relatively long, and the remaining copper distribution sub-loop might be relatively short, suggesting a relatively low sub-loop ratio. However, as indicated in the draft STD, the median US zone 3 sub-loop ratio is very similar to the median US zone 1 ratio.

[44] LECG, *Price benchmarking of sub-loop UCLL, backhaul and co-location services*, 14 October 2008, Table 1, p 11.

[45] For example, LECG's cross-submission proposes an averaged sub-loop price of $21.58 per month, which is 89% of the averaged UCLL price.

[46] Telecom (Chorus), *Submission on draft Sub-loop Services STD*, 15 October 2008, p 41, para 194.3.

equal or exceed a cost-based rental for the full UCLL MPF service. This view is supported by telecommunications regulators in other countries such as Austria, Sweden, Denmark, and Germany which informed the Commission that the equivalent of the Sub-loop MPF recurring charge was set on the basis that the sub-loop is a component of the full loop. The Commission was also unable to obtain sufficient information from the regulator in the UK to sufficiently alleviate the concerns that the Sub-loop rental is not cost-based.

118. Therefore, the Commission has not included rates from jurisdictions where the Sub-loop MPF price equals or exceeds the UCLL MPF price. The Commission also notes that this decision to exclude such data has only a minor impact on the regulated price, as the benchmarked price ratio would increase from 60.4% to 60.5% if these rates were included.

119. Fourth, Telecom (Chorus) submitted that the Commission's proposed approach makes full use of US zone data, despite acknowledging that this is likely to over-represent US non-urban zones. However, as noted above, the ratio of Sub-loop MPF to UCLL MPF prices does not vary significantly from urban to non-urban zones in the US. Accordingly, the Commission does not consider that any such over-representation will be an issue.

120. Finally, Telecom (Chorus) referred to LECG's submission, that a ratio calculated from one dataset and then applied to the benchmark results from another dataset is technically incorrect. LECG's submission fails to explain what is meant by this statement, or what the implications might be.

121. LECG made a number of additional comments on the draft STD. According to LECG, the Commission's approach in the draft STD is not consistent with the IPP, as the IPP requires benchmarking against similar services. LECG submitted that if full UCLL services are considered similar to sub-loop UCLL services, then the sub-loop price should be equal to the full UCLL price.[48]

122. The Commission disagrees with LECG's claim that the approach taken in the draft STD is inconsistent with the IPP. The Commission's approach is not based on the assumption that the sub-loop UCLL and full UCLL are the same services (and hence the prices should be the same). However, as the Sub-loop UCLL Service is a component of the full UCLL Service (the difference being the link between the Distribution Cabinet and the Exchange), the Commission considers that benchmarking the relative price of the Sub-loop UCLL and full UCLL services in each jurisdiction is a valid benchmarking approach under the IPP.

123. The Commission also notes that the approach taken in the draft STD to benchmarking the ratio of sub-loop prices to full UCLL prices in other jurisdictions, and applying that ratio to the UCLL price set by the Commission in the UCLL STD, is consistent with what LECG appears to have proposed prior to the draft STD. According to a letter from Telecom (Chorus) to the

---

[47] In the draft STD, the Commission noted (paragraph 86) various European jurisdictions, where the regulator had explained that the sub-loop price was lower than the full loop price, as the sub-loop is a component of the full loop.

[48] LECG, *Price benchmarking of sub-loop UCLL, backhaul and co-location services*, 14 October 2008, paragraph 44.

Commission, LECG had identified the following benchmarking issue with respect to the Sub-loop UCLL Service:[49]

> Limited price data for the Sub-loop UCLL Service from the jurisdictions used by the Commission in the UCLL determination, but significantly more data available from other jurisdictions.

124. LECG's possible solution at this stage was to:[50]

> Benchmark the ratio of Sub-loop UCLL to UCLL (full loop) prices in other jurisdictions and apply that ratio to the New Zealand Sub-loop UCLL prices.

125. The Commission understands that prior to the draft STD, LECG considered that the ratio approach that was subsequently used in the draft STD to have been a valid approach under the IPP.

126. Further, in following the methodology used to determine the rental for the UCLL MPF Service, which is subject to the same IPP as the Sub-loop MPF Service, LECG's approach to de-averaging the sub-loop price is based on the use of price ratios. In the UCLL STD, the Commission initially determined an average UCLL price, which was then de-averaged into an urban and a non-urban price. To do this in each jurisdiction where UCLL rates had been de-averaged,[51] the Commission expressed the average urban UCLL price as a ratio of the average UCLL price in that jurisdiction, and similarly for the average non-urban UCLL price. These ratios were 87% and 160.5%, respectively.[52] These ratios were used to determine urban and non-urban UCLL rates for New Zealand.

127. LECG has not raised any concerns with using similar ratios to de-average the sub-loop prices that they proposed in their submission.

128. The Commission also notes that LECG supported the Commission's proposal to determine the connection charge for the Sub-loop UCLL Service by benchmarking the ratio of Sub-loop UCLL/UCLL connection charges.

129. Telecom (Group) submitted that in the UCLL STD, the Commission considered that should the UCLL price be too low, this would spur Telecom to invest in fibre.[53] Telecom argued that the Commission is now undermining this by the proposed 'price cap' and pricing methodology in the draft STD. Telecom (Group) argued that if it is unable to earn a reasonable return on UCLL, then the

---

[49] Telecom (Chorus) letter to Telecommunications Commissioner, *Sub-loop Services Standard Terms Proposal: Request for consultation on the application of the IPP*, 5 August 2008.
[50] Telecom (Chorus) letter to Telecommunications Commissioner, *Sub-loop Services Standard Terms Proposal: Request for consultation on the application of the IPP*, 5 August 2008. The Commission has assumed that this reference should be to the ratio being applied to the New Zealand full UCLL price.
[51] Table 6 of the UCLL STD lists the jurisdictions used, where rates had been de-averaged.
[52] In other words, the average urban rate was 13% below average, while the average non-urban rate was 60.5% above average.
[53] Professor Hausman made a similar point in his cross-submission, where he submitted (footnote 3) that "the Commission instead decided to keep UCLL rates low to create an incentive for Chorus to invest in fiber."

imposition of the Commission's UCLL price cap will prevent Telecom from earning a reasonable return on its FTTN investment.[54]

130. The paragraphs in the UCLL STD to which Telecom (Group) referred[55] were a response to a claim made by CRA International that a low UCLL price could adversely affect Telecom's future incentives to invest in fibre. In response, the Commission noted that a below-cost UCLL price would likely have the opposite effect, in that it would provide Telecom with a stronger incentive to replace the loss-making UCLL network with a fibre network. Importantly, the Commission did not reduce the UCLL price to stimulate such investment, instead concluding that CRA International's argument did not justify the selection of a UCLL price above the median.

131. Submissions from other parties on the draft Sub-loop STD generally supported the approach taken by the Commission to determining the recurring charge for the Sub-loop MPF service.

Risk differential

132. Professor Hausman made a number of arguments that related to the comparison in the draft STD of the Sub-loop UCLL and Sub-loop Backhaul prices with the full UCLL price. He submitted that such a comparison is fundamentally incorrect from an economic viewpoint, as it fails to account for the higher risks associated with next-generation-networks compared to the risks inherent in a legacy copper-based network, including greater uncertainty around the demand for Sub-loop Services.

133. According to Professor Hausman, such uncertainty creates an 'option value' of waiting in order for investors to gain further information on whether significant demand for Sub-loop Services will actually occur. If the Sub-loop Network is built now, this option is lost.[56]

134. As noted in this determination, the Commission has made some allowance for the difference in risk associated with a new fibre-based investment such as Telecom's FTTN programme. In addition, the Commission notes that the comparison of the costs of using the Sub-loop Services (including the Sub-loop UCLL and Sub-loop Backhaul Services) with the costs of using the full UCLL service is similar to the kind of comparisons undertaken in other jurisdictions.[57]

135. On the specific point of real options, the Commission noted in the UCLL STD that:[58]

> In assessing the applicability of [real option theory], Ofcom has noted that calculating the value of real options was likely to be very difficult in practice. In particular, it requires good estimates of the relevant parameters, and the application of ROT is

[54] Telecom (Group), *Cross-submission on draft Sub-loop Services STD*, 31 October 2008, p 10.
[55] Commerce Commission, *Decision No. 609: Standard terms determination for the designated service Telecom's unbundled copper local loop network*, 7 November 2007, paragraphs 219 and 220.
[56] Professor Hausman, *Submission on draft Sub-loop Services STD*, 14 October 2008, paragraph 8.
[57] For example, the work undertaken by Analysys on behalf of ComReg and OPTA.
[58] Commerce Commission, *Decision No. 609: Standard terms determination for the designated service Telecom's unbundled copper local loop network*, 7 November 2007, para 229.

> an area where best practice has yet to be determined by any regulator. Ofcom also recognised that other considerations such as the first-mover advantage, the uncertainty and reversibility of the investment, and the ability to stage or pilot investments need to be taken into account when assessing whether or not ROT is relevant or applicable.

136. As Ofcom has noted, it may be possible to value real options for existing services using empirical evidence on demand, but no such evidence is available for investments in new products and services.[59] While Ofcom has discussed real options in various consultation documents, it has also noted the difficulties of establishing a value for any options and does not appear to have implemented a real options approach at this stage.[60]

137. In the case of the Sub-loop Services, there a number of potential arguments that emphasise the complex nature of calculating the value of real options.

138. The Commission is not persuaded by Professor Hausman's arguments that the demand uncertainty associated with Sub-loop MPFs is significantly higher than that for full UCLL MPFs.

139. Where Distribution Cabinets are installed, customers connected to those cabinets will be cut across from the full UCLL Service to a Sub-loop UCLL Service. In both cases, services will still be provided to customers using the Sub-loop MPF, and so demand uncertainty should be reasonably similar in relation to current services, which are sufficient to cover the majority of the cost of the Sub-loop Services. Any uncertainty would be limited to recovering the incremental cost of the Sub-loop Services compared to the UCLL Service, through new retail services or greater uptake of current services such as broadband internet services.

140. If a competitor does not use the Sub-loop Services, Telecom (Wholesale) is likely to. This is implied later in Professor Hausman's submission, where he stated that:[61]

> most demand for Chorus' future NGN access network will be from current users of Chorus' access service for residential and [SME] business premises.

141. Therefore, if demand for Sub-loop MPFs is similar to that for UCLL MPFs, at least for the majority of the costs associated with current retail services, the Commission considers that the basis for Professor Hausman's option value is reduced. In addition, it is questionable whether "waiting" will solicit much more information for an investor on demand for Sub-loop MPFs. The investor would presumably need to trial new services in order to test demand, which requires the kind of investment that Professor Hausman says is being delayed.

142. Furthermore, the Commission would also need to account for any compensation that Telecom received for its agreement to invest in the FTTN network, for example through the form of separation imposed upon Telecom. In addition, one

---

[59] Ofcom, *Regulatory challenges posed by next generation access networks: public discussion document*, 23 November 2006, paragraph 4.58.
[60] See for example, paragraph 141 above.
[61] Professor Hausman, *Submission on draft Sub-loop Services STD*, 14 October 2008, paragraph 19.

consequence of the FTTN investment is that there may be some detrimental impact on Exchange-based competition due to a reduction in the addressable market as End Users migrate to cabinet-based services. To this extent, this could provide Telecom with a benefit from earlier rather than later investment.

143. The Commission has determined that there will not be any compensation for an option value in respect of the Sub-loop Services.

Commission's decision

144. Having considered submissions from parties on the benchmarking approach taken in the draft STD to determine the recurring charge for the Sub-loop MPF Service, the Commission considers that the approach set out in the draft best meets the requirements of section 18 of the Act. The Commission considers that the concerns expressed in the draft STD over the use of the methodology used to determine the full UCLL MPF price to set a Sub-loop MPF price remain valid,[62] in particular, that the resulting median Sub-loop MPF price jurisdiction will differ from the median full MPF price jurisdiction, and that the two prices are therefore likely to be inconsistent.[63] In the Commission's view, the fact that LECG's proposed Sub-loop UCLL prices are a relatively high proportion of the UCLL price re-iterates such concerns, indicating that this approach would not best meet section 18 of the Act.

145. For the purposes of this determination, the Commission has determined a recurring price for the Sub-loop UCLL Service, based on a benchmarked proportion of 60.4% of the full UCLL price. This results in a sub-loop UCLL price of $11.99 per month in urban areas, and $22.14 per month in non-urban areas.

Non-Recurring Charges

Approach set out in the draft STD

146. In the draft STD, the Commission noted that the pricing of unbundled sub-loop services in overseas jurisdictions involves a two-part tariff structure, with a recurring line rental to cover the cost of the distribution sub-loop, and a non-recurring charge to cover the one-off connection costs of the service.

147. The Commission took a similar approach to determining the non-recurring connection charges in the draft STD as it did to the recurring rental charge, namely to benchmark the ratio of such charges for sub-loop and full UCLL services. The Commission set a number of non-recurring charges for the Sub-

[62] The draft noted that the UCLL methodology required a state-wide average price to be determined, and that such an average sub-loop UCLL price could not be determined due to the absence of information on the distribution of lines across geographic zones. LECG's submission contained US access line counts taken from FCC Universal Service Fund data that was used in the 2000 version of the HCPM model. The Commission notes that there is a discrepancy in the LECG line data (for example, their total access line count is 169.9 million lines in 48 states) and the line counts used in the Commission's source of UCLL prices (where the total line count across the same 48 states is 124.7 million lines). LECG noted this discrepancy, but submitted that the effect is marginal.

[63] A similar concern appears to have been identified by LECG as outlined in Telecom (Chorus)'s letter to the Telecommunications Commissioner of 5 August 2008.

loop MPF service, including for single service transfers, bulk service transfers and new connections.

148. For a single service transfer, the resulting ratio was a sub-loop connection charge that was 174% of the full UCLL charge.[64] This resulted in a single connection charge of $130.23 per transfer for the Sub-loop UCLL Service.

149. For bulk transfers (for 10 or more simultaneous transfers), a bulk transfer rate of $97.67 per transfer was determined, based on applying a 25% discount to the single transfer rate, as was the case for the full UCLL service.

150. In respect of new connections, the Commission determined that where an additional site visit ('truck roll') to the customer premises is required, for example to establish and test the MPF service, an additional charge would be incurred to recover costs. The Commission set this additional charge based on the margin between the UCLL new connection charge where an additional site visit is required ($225), and the UCLL transfer charge where no such site visit is required ($74.83). According to the draft STD, the resulting margin of $150.17 would be added to the above sub-loop transfer charges in those instances where an additional site visit is required to establish the Sub-loop MPF Service.

Consideration of submissions and further consultation

151. Most submitters contended that the non-recurring costs of connecting a Sub-loop UCLL Service are likely to be higher than those for the full UCLL service. Telecom (Chorus) accepted that the approach taken in the draft STD to benchmark the ratio of Sub-loop UCLL/UCLL connections charges is a pragmatic approach, while Orcon, Kordia and CallPlus submitted that the benchmarked 74% mark-up applied to the full UCLL connection charge was too high, as a technician was likely to visit several cabinets per in one area. Covec agreed that connection costs will be higher for the Sub-loop UCLL Service, but argued that the discount for bulk transfers should be higher for the Sub-loop UCLL Service, due to greater scale economies associated with performing multiple transfers.

152. The Commission considers that the methodology used in the draft STD to determine the non-recurring charge for the Sub-loop UCLL Service is appropriate. Therefore, the Commission has used the same approach for the purposes of this determination.

153. However, the Commission has identified an issue with the non-recurring charge data used in the draft STD. Specifically, for the US states used in the draft sub-loop STD, the UCLL connection charges in the denominator of the ratio differed from the non-recurring charges that were used in the UCLL STD. For example, in the draft sub-loop STD, the sub-loop connection charge in Alabama was US$65.80, and the UCLL connection charge was US$37.81. The sub-loop connection charge was therefore found to be 174% of the UCLL connection

[64] The draft noted that connection of the Sub-loop MPF service involves a visit to the cabinet, whereas for the full UCLL service, the connection occurs at the Exchange. This suggests that the cost per connection is likely to be higher for the Sub-loop service.

charge in Alabama. However, in the UCLL STD, the connection charge used for Alabama was US$136.94.

154. The Commission therefore sought further information from LECG, who provided the data on US connection charges during the UCLL STD process as part of a submission on behalf of Telecom ("UCLL submission").

155. In its response, LECG noted that it had:[65]

> ... derived the non-recurring charges ... used in {our UCLL submission} from a number of non-recurring charge categories applicable to 2-wire ADSL compatible unbundled loops.

156. LECG stated that its calculation of the non-recurring charge for the UCLL service typically included the following:

- two service order charges (one for installation, one for disconnection);
- an installation charge; and
- a disconnection charge.

157. LECG noted that the sub-loop and full UCLL connection charges that the Commission used in the draft sub-loop STD only included the installation charge. In addition, LECG noted that the installation charges used in the draft STD were for analogue voice grade loops, rather than ADSL-compatible loops which according to LECG are more suitable for DSL services.

158. LECG concluded that:[66]

> ... the Commission uses its non-recurring charges to compute the ratio of the subloop to full loop non-recurring charges, and then applies this ratio to the UCLL connection price determined in Decision 609. In our view, the appropriate approach to this calculation is to use the same service/price definitions used in Decision 609 (which came from our report), and for the numerator to use those relevant charges for subloop, and for the denominator to use those for full loop.

159. Having clarified the non-recurring charges that were submitted in the context of the UCLL process, the Commission recalculated the non-recurring charges for the Sub-loop UCLL and full UCLL services, to ensure that the charges are consistent with those used in the UCLL STD. This included the use of the non-recurring charges derived by LECG, as well as the inclusion of a number of additional charges for the Sub-loop UCLL Service. Figure 7 below shows the components of the non-recurring charges for Sub-loop UCLL Services in the US.

[65] LECG Memorandum, *Derivation and source of non-recurring charges used in the UCLL LECG report*, 27 March 2009.
[66] ibid.

Figure 7: Components of Sub-loop Non-Recurring Charges in US

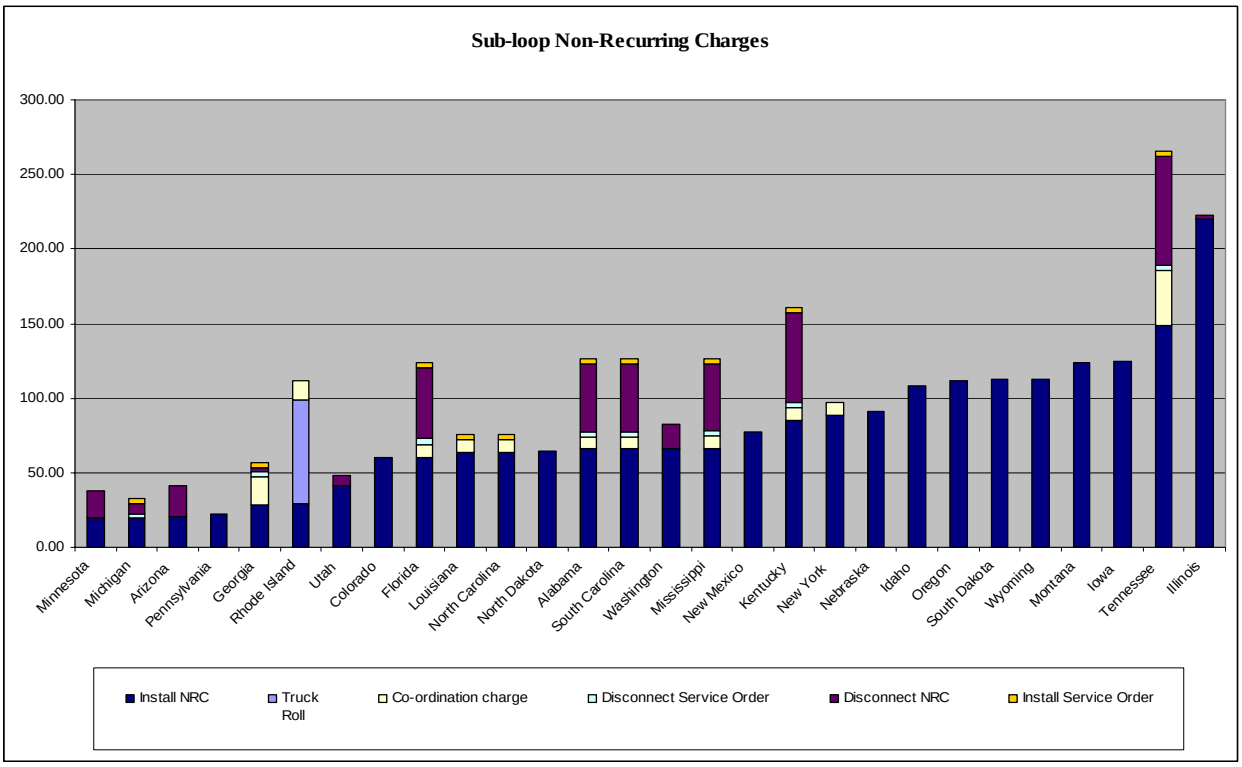

Source: Commerce Commission, 2009[67]

160. The resulting median ratio of non-recurring charges for the Sub-loop UCLL Service relative to the full UCLL service was 108%. Given the non-recurring charge for the full UCLL service of $74.83 that was determined in the UCLL STD, this would result in a sub-loop UCLL non-recurring charge of $81.07.

161. The Commission requested further submissions from parties on the revised approach.[68]

162. Covec and Vodafone expressed concern with the inclusion of apparent outliers in the Commission's dataset. Specifically, Covec noted that the ratios for Illinois (1030%), Idaho (978%) and Minnesota (867%) were so far removed from the remainder of the dataset that they should be excluded, resulting in a benchmarked median price ratio of 105%, and a connection charge of $78.34. [69]

163. In its submission, Telecom (Chorus) included material from LECG. LECG did not contest the method proposed by the Commission, but proposed amendments to the dataset where it concluded the information to be incomplete or incorrect. In addition to several corrections to the data, LECG proposed including 12 additional data points from US states.[70] The resulting ratio proposed by LECG was 164.12%, to give a connection charge of $122.81. As a cross-check, LECG

[67] Data available at http://www.comcom.govt.nz/IndustryRegulation/Telecommunications/StandardTermsDeterminations/SubloopUCLLservice/DecisionsList.aspx

[68] Commerce Commission, *Sub-loop UCLL Connection Charges: Further Consultation*, 20 April 2009.

[69] Covec, *Submission on Sub-loop consultation material*, 4 May 2009, p 5.

[70] LECG, *Appendix to Telecom (Chorus) submission on Sub-loop Services consultation material*, 4 May 2009, p 1.

noted that the median value of all available sub-loop connection charges in other jurisdictions is $164.77.[71]

164. Covec calculated that the median ratio for all added jurisdictions was 2,344% compared to 108% for the original jurisdictions, and that the 95% bootstrap percentile confidence intervals were 1,236% - 4,219% and 97% - 193%, respectively (indicating that the medians were statistically different).[72] Covec noted that all the higher ratios that have been added are associated with one operator (AT&T), and that the significant difference with ratios from other operators and jurisdictions suggest they reflect a factor specific to AT&T and as such are not suitable for benchmarking the connection charge for New Zealand.[73] Accordingly, Covec proposed that all ratios greater than 500% be excluded on the basis that these ratios are likely to reflect specific local factors that are not relevant to New Zealand.[74]

165. In response to the concerns expressed by Covec in relation to outliers, Telecom (Chorus) noted that it did not consider that there were any outliers for the following reasons:

- all data points are from the same population data set, having been verified against price contracts;
- the fact that the dataset is highly skewed with 'fat tails' does not provide any basis to conclude that there are errors; and
- the Commission has used the median which is much less sensitive to outliers.[75]

166. Telecom (Chorus) also noted that if the Commission considered that there is an issue with outliers, then these data points should be identified using Peirce's Criterion, which would result in the exclusion of Kansas, Oklahoma and Wisconsin. However, Telecom (Chorus) also noted that if Peirce's Criterion is applied to the log of the ratios, no outliers are identified, and that the dataset is closer to a log-normal than normal distribution.[76]

167. Telecom (Group) supported the cross-submission from Telecom (Chorus) on the issue of the treatment of outliers. Telecom (Group) also noted that observations that seem unusually higher or lower than expected may be outside the anticipated range for a number of valid reasons (in which case they should be excluded) or for reasons which justify their exclusion (such as data gathering or entry mistakes).[77]

168. The Commission considers that even though it is benchmarking the median value, rather than the mean, consideration should still be given to outliers. As

[71] LECG, *Appendix to Telecom (Chorus) submission on Sub-loop Services consultation material*, 4 May 2009, p 1.
[72] Covec, *Cross-submission on Sub-loop consultation material,* 11 May 2009, p 8.
[73] ibid, p 8.
[74] ibid, p 8.
[75] Telecom (Chorus), *Cross-submission on Sub-loop consultation material,* 11 May 2009, p2.
[76] ibid, p 3.
[77] Telecom (Group), *Cross-submission on Sub-loop consultation material*, 11 May 2009, p 6.

noted by Covec, the AT&T connection ratios appear to be significantly higher than those for other jurisdictions. This is in part due to relatively low UCLL connection charges appearing in the denominator of the ratio.[78] The Commission considers that the ratios in these jurisdictions are unlikely to be informative as to the relative costs of connecting a Sub-loop MPF in New Zealand. For example, the ratio in Wisconsin (5075%) would suggest a cost of connecting a Sub-loop MPF in New Zealand of NZ$3,800 per connection. This is extremely unlikely given that, in its submission of the draft STD, Telecom (Chorus) proposed a cost-based fee of $130.23 for a subsequent Migration, which is similar in nature to a Sub-loop MF transfer or connection, but which entails the additional task of removing the jumpers from the Access Seeker's Exchange-based equipment.[79]

169. In the Commission's view, it is unlikely that the very large differences in prices between the connection of a UCLL MPF and a Sub-loop MPF in the AT&T jurisdictions are applicable to New Zealand. Therefore, the Commission has reduced the weight placed on the AT&T jurisdictions, and considers that the approach proposed by Telecom (Chorus) is a reasonable way of doing so.

Commission's decision

170. Given the above concerns, the Commission has removed those AT&T connection charge ratios that were identified as potential outliers by Telecom (Chorus) (i.e., Kansas, Oklahoma and Wisconsin), which results in a ratio of 145%.

171. Accordingly, the Commission has determined that the Sub-loop MPF new connection and transfer charges are to be $108.77.

172. In regard to bulk transfers, the Commission has retained the 25% discount for 10 or more simultaneous transfers or connections, resulting in a charge of $81.57 per transfer.

173. While Covec submitted that this discount should be higher, due to greater scale economies associated with performing multiple transfers compared to the UCLL Service, the Commission considers that the lower threshold of 10 simultaneous transfers or connections (compared to 20 under the UCLL STD) sufficiently addresses this concern.

174. Consistent with the draft STD, the Commission has also determined that where an additional site visit ('truck roll') to the customer premises is required, there is to be a charge of $258.94. In determining this charge, the Commission has applied the same mark-up ($150.17) on top of the transfer charge that was applied under the UCLL STD for a UCLL connection where an additional site visit is required.

[78] For example, in Wisconsin, the sub-loop connection charge is reported as US$201.47, while the UCLL connection charge is US$3.97, resulting in a ratio of 5075%.
[79] Telecom (Chorus), *Submission on draft standard terms determination for Telecom's sub-loop services*, 15 October 2008, p 55-61.

Other core charges

Sub-loop UCLL Tie Cable Service Rental

175. The Sub-loop UCLL Tie Cable provides a connection from the distribution frame in the Distribution Cabinet to the Access Seeker's remotely located equipment.

176. The approach used for setting the space rental for the UCLL Tie Cable involved taking the average (mean) of Openreach's 100 and 500 pair cable rental. Openreach's annual prices were converted into NZD using a PPP conversion rate[80] and then converted to monthly charges.

177. The same approach was proposed in the draft Sub-loop Services STD for setting the space rental for the Sub-loop UCLL Tie Cable Service, except that the average (mean) was taken of the 20, 50 and 100 pair cable rental for Openreach's sub-loop service, which are priced at £27.23, £32.68, and £42.14, respectively.[81]

178. The Commission determined that the space rental for the Sub-loop Tie Cable to be $6.66 per cable per month.

[80] To the extent that this component measures a non-tradable good, PPP is more appropriate than exchange rate currency conversion.
[81] The PPP rate used is 0.4255.

PRICE TERMS – SUB-LOOP CO-LOCATION CORE CHARGES

Introduction

179. The section sets out the key decisions that the Commission has made in relation to the core charges for the Sub-loop Co-location Service. Of particular significance is the Sub-loop Co-location recurring charge for space in Telecom's Distribution Cabinets.

180. As set out below, the lack of appropriate benchmarks is a substantive barrier to applying a plain and ordinary interpretation of the IPP in setting the core recurring core for this service. In the absence of suitable benchmarks for the Sub-loop Co-location Service, the Commission has determined a rental for the cabinet space based on actual average costs incurred by Telecom in building and installing Distribution Cabinets, and dividing this cost by the proportion of the occupied Rack Units that the Access Seeker uses. The Commission considers that such cost-based co-location charges will give best effect to section 18 of the Act by promoting competition for the long-term benefit of End Users.

181. A summary of the submissions on core charges is set out in Appendix B.

Recurring Monthly Rental Charge

Approach set out in the draft STD

182. In the draft STD, the Commission determined a monthly rental charge for co-location of equipment in Telecom's Distribution Cabinets. This recurring co-location charge is to recover the costs of building and installing the Distribution Cabinets.

183. The Commission noted that similar cabinet co-location services were only available in a small number of countries, and that there was not a consistent approach for determining co-location charges. Rather than directly benchmarking co-location rates, the Commission noted that such rates were typically related to the space used by Access Seekers, and that the equivalent unit of space in Distribution Cabinets in New Zealand is the Rack Unit. Therefore, the Commission considered information supplied by Telecom on the cost of building and installing Distribution Cabinets, and determined a recurring monthly co-location charge per Rack Unit, based on these costs.

184. The Commission determined that the average cost per Distribution Cabinet (excluding power infrastructure) was $58,973 per cabinet.

185. In converting this upfront cost into a recurring charge, the Commission used a pre-tax cost of capital of 10%,[82] and an asset life which Telecom had submitted was 20 years. The Commission also allowed for a contribution to common costs through a 10% mark-up on capital costs.

[82] This was the cost of capital that the Commission had also used in respect of co-location services at the local Exchange. See Commerce Commission, *Decision No. 610: Standard Terms Determination for the designated service Telecom's unbundled copper local loop network co-location*, 7 November 2007, para 65.

186. The resulting total monthly charge was $635 per Distribution Cabinet. The Commission proposed that this cost be recovered according to the number of Rack Units used by the Access Seeker, as a proportion of the total number of occupied Rack Units in the Distribution Cabinet (excluding Distribution Cabinet Services).

187. Parties generally supported the approach taken in the draft STD to set the price of the Sub-loop Co-location Service. The main issues raised in submissions on the Commission's proposed approach related to the following specific parameters used to set the cost-based price:

- the economic life of the Distribution Cabinet;
- the cost of capital; and
- an allowance for opex costs.

188. In addition, Telecom (Chorus) submitted that the Commission's annualisation of capital costs should allow for the time taken to build and install the cabinets, while Covec submitted that the compounding effect of the cost of capital should be taken into account when determining a monthly rental.

189. Finally, the Commission has revised the estimated average capital cost of Distribution Cabinets, to include the cost of the cabling and jumpering work required to connect the Distribution Cabinet.

Economic life of Distribution Cabinets

190. In the draft STD, the Commission converted the average capital cost of building and installing a Distribution Cabinet into a monthly rental, by applying an annualisation factor to the capital cost. This annualisation factor was based on an expected cabinet life of 20 years.

191. In its submission on the draft, Telecom (Chorus) claimed that while 20 years was the expected physical life of the cabinet, the expected economic life was shorter, due to the likelihood of a fibre-to-the-home (FTTH) deployment, which would make the cabinets redundant. Telecom (Chorus) proposed that an economic life of 10 years be used, based on FTTH deployments in other jurisdictions.[83]

192. The use of a shorter life increases the monthly cabinet co-location cost.[84] The Commission notes that the cabinet costs being recovered through the cabinet co-location charge relate to the costs of building and installing the cabinet shell as opposed to broadband equipment that is housed within the cabinet. The Commission also notes that while a greenfield FTTH network may have different aggregation nodes, any FTTH build by Telecom is likely to be incremental, so the location of Distribution Cabinets may be still relevant. To

[83] At the Commission's conference, Telecom (Chorus) referred to a likely range of between 5 and 15 years. Sub-loop Services Conference, *Transcript*, 9 December 2008, p 240.
[84] All other things held constant, shortening the cabinet life from 20 years to 10 years would increase the monthly co-location charge from $635 per month (draft STD) to $880 per month.

this extent, the Distribution Cabinets currently being deployed would not become obsolete. Furthermore, it is unlikely that all End Users served from a Distribution Cabinet will be migrated to FTTH services at the same time, thereby extending the useful life of the Distribution Cabinet.

193. The Government has recently released details of its planned Government Broadband Investment Initiative (**GBII**), the objective of which is to accelerate the roll-out of ultra-fast broadband to 75% of the population within 10 years via deployment of FTTH networks. The initial focus of the GBII in the first six years will be on priority broadband users, such as businesses, educational and health services and greenfield developments.

194. At this stage it is difficult to ascertain the extent to which the cabinets currently being deployed by Telecom as part of its FTTN programme will continue to be used in a FTTH deployment.

195. In light of the above, the Commission considers that it is reasonable to shorten the economic life of the Distribution Cabinets, and that a 10 year cabinet life takes adequate account of the prospect and potential timeframe of a FTTH deployment in New Zealand.

196. The Commission also notes that Telecom has gained approval from its auditors to a 10-year life for Distribution Cabinets, which has been used in its statutory accounts.[85]

197. The Commission has therefore reduced the economic life used for Distribution Cabinets from 20 years to 10 years.

Cost of capital

198. In the draft STD, the Commission used a pre-tax 10% cost of capital to annualise cabinet costs. The 10% figure was based on the cost of capital figure used by the Commission for Exchange-based co-location. The draft STD considered that cabinet co-location is sufficiently similar in terms of risks as Exchange-based co-location, as both co-location services relate to the facilities (such as racks and shells) for housing equipment.

199. In this final Sub-loop Services STD, the Commission has determined that the pre-tax cost of capital for Distribution Cabinets is 11.1% as set out in paragraph 488.

Opex costs

200. In submitting on the draft STD, Telecom (Chorus) proposed that a 12% mark-up on annualised capital costs be included to allow for cabinet repairs and maintenance expenditure, based on the mark-up that the Commission allows in the TSO determinations. In response, Covec submitted that care should be taken to ensure that any opex mark-up does not lead to over-recovery of costs.

[85] Sub-loop Services Conference, *Transcript*, 9 December 2008, p 240.

201. The Commission uses an opex mark-up on annualised capital costs in the TSO determinations. In respect of the access network, this opex mark-up is 12%,[86] and in respect of the core network, the opex mark-up varies between 2.8% and 4.3%.[87]

202. The Commission does not consider that the 12% opex mark-up used in the TSO determination and proposed by Telecom (Chorus) is appropriate for cabinets. This is because the level of opex, relative to capex, is likely to vary in different parts of the network. As noted above, in the case of the TSO, the Commission has various opex mark-ups, ranging from 2.8% to 12%. In the case of the 12% mark-up, where the Commission has applied this to aerial cable, the Commission has noted that aerial plant typically has lower upfront deployment costs, and higher ongoing maintenance costs.[88] This suggests that an opex mark-up on capital costs will be relatively high for assets such as aerial cable.

203. However, it is not clear that such a mark-up will be appropriate for cabinets. Therefore, the Commission has had regard to information provided by Telecom (Chorus) on actual operational maintenance costs associated with cabinets deployed to date.

204. On reviewing the information provided by Telecom (Chorus), the Commission considered that there was double counting of costs related to some power services. Telecom (Chorus) confirmed that this was the case and provided a revised cost of $100.69 per month.[89]

205. The Commission has used a mark-up of $101per month for opex in setting the Sub-loop Co-location core recurring charge.

Other issues

206. Telecom (Chorus) submitted that the Commission should allow for the time taken to build and install the cabinets. Telecom (Chorus) proposed a time-to-build factor of 0.5 years, consistent with the Commission's TSO determinations.

207. The Commission considers it reasonable to allow for the opportunity cost of funds that have been committed to an investment, and where there is a timing delay in that investment generating a cashflow. At the Sub-loop Services Conference, Telecom (Chorus) indicated that it takes approximately nine months to build and install a Distribution Cabinet.[90] As a result, Telecom (Chorus)'s proposed use of a six month time-to-build is reasonable.

208. Covec submitted that the compounding effect of the cost of capital should be taken into account when determining a monthly rental.

---

[86] See for example, Commerce Commission, *Final Determination for TSO Instrument for Local Residential Service for period between 1 July 2003 and 30 June 2004*, 23 March 2007, paragraph 347.
[87] ibid, Table 50. The 2.8% applies to switches, land and buildings, while the 4.3% applies to various forms of fibre (buried, aerial and underground) and conduit.
[88] ibid, paragraph 346.
[89] Telecom (Chorus), *Subsequent material received (14 Jan 2009) from Telecom (Chorus) in relation to information requests made at the Sub-loop Conference*, 14 January 2009, p 1.
[90] Sub-loop Services Conference, *Transcript*, 8 December 2008, p 43.

209. In the draft STD, the Commission applied an annualisation factor to the Distribution Cabinet cost, to derive an annual co-location charge. This was then divided by 12 months, to get a monthly charge of $635 per Distribution Cabinet.

210. As noted by Covec, a more precise method of deriving a monthly charge is to apply an 'annualisation' factor that uses monthly parameters.[91] The Commission has determined a monthly charge for the Sub-loop Co-location Service on this basis.

211. The Commission has also reviewed its estimate of the average capital cost of Telecom's Distribution Cabinets to be recovered through the recurring co-location charge. Further information provided by Telecom (Chorus) on 11 May 2009 indicated that some of the costs that had been included in the estimated average Distribution Cabinet costs related to the installation of irrelevant active equipment, and other costs that had been included would be recovered under the Sub-loop Backhaul charge. As a result of removing these costs, the average capital cost of a Distribution Cabinet has decreased from $58,973 used in the draft STD, to $55,048 per cabinet.

212. The Commission has retained the 10% common cost mark-up that was used in the draft STD.

213. Table 2 summarises the Commission's calculation of the monthly charge for the Sub-loop Co-location Service.

Table 2: Calculation of the Sub-loop Co-location rental

	Draft STD	**Final STD**
Average capital cost per Distribution Cabinet	$58,973	$55,048
Average capital cost per month	$577	$792
Opex contribution	-	$101
Common cost contribution	$58	$79
Total monthly charge	$635	$972

Source: Commerce Commission, 2009

214. For the purposes of this STD, the Commission has determined that the total recurring charge for each Distribution Cabinet is $972 per month. As set out in the draft STD, the Commission has determined that the monthly recurring charge for co-location of Access Seeker Equipment in a Distribution Cabinet is to be calculated on a case by case basis according to the following formula:

$$A = (B_1 + B_2) \times \left(\frac{C}{D}\right)$$

Where: A = the monthly co-location charge paid by the Access Seeker

[91] Specifically, a monthly cost of capital (equal to (1+r)^(1/12)-1, where r is the annual cost of capital), and an asset life and time-to-build factor expressed in months.

B_1 = the total recurring charge for the Distribution Cabinet ($972 per month)
B_2 = additional cost of any additional Pedestal (excluding the associated power infrastructure), converted into a monthly charge using a amortisation factor of 1.44% (based on an asset life of 10 years and a pre-tax cost of capital of 11.1%), plus a common cost mark up of 10%
C = the number of Rack Units used by the Access Seeker
D = the total number of occupied Available Rack Units (including those to be used by the Access Seeker)

Sub-loop Co-location tie cable space rental

Internal tie cables

215. Under the draft STD, the Commission set a zero charge for the rental of cable space within Distribution Cabinets as the full costs of these assets were deemed to be already recovered through the rental for Rack Units. Telecom (Chorus) submitted that a charge for internal cables should be reinstated as cable space is limited meaning that not charging may lead to inefficient use of space through over-specifying cable size and not freeing up unused cables that result from churn.[92]

216. The Commission notes that the final Sub-loop STD contains provisions for a grooming service, which includes removal of unused tie cables, and that Telecom is in the best position to ensure orders are based on reasonable estimates of Access Seeker's requirements. These processes should be sufficient to address the concerns raised by Telecom (Chorus) without the need to over-recover cabinet costs through double-charging.

217. Accordingly, the Commission has determined that there should not be a charge for rental of cable space within Distribution Cabinets for tie cables.

External tie cables

218. Under the draft STD, the Commission considered that a space rental should be payable for tie cables that are external to the Distribution Cabinet and applied the same space rental charge as that set for the Sub-loop UCLL Tie Cable of $6.66 per cable per month, given that both services require the same infrastructure (i.e., the trench/duct to the Distribution Cabinet manhole). No significant issues were raised by submitters in relation to this issue. Accordingly, in this final STD, the Commission has determined that the space rental for external Sub-loop Co-location tie cables should be $6.66 per cable per month.

[92] Telecom (Chorus), *Submission on draft standard terms determination for Telecom's sub-loop services*, 15 October 2008, p 63.

PRICE TERMS – SUB-LOOP BACKHAUL CORE CHARGES

Introduction

219. In this section, the Commission summarises the key decisions that it has made in relation to the core Sub-loop Backhaul charges. Given that the nature of submissions in relation to the Sub-loop Backhaul service description and the core charges are closely linked, the Commission has also addressed the major issues in relation to the service description in this section, in order to provide sufficient context for the pricing decisions.

220. In summary, the Commission has determined that the Sub-loop Backhaul Service is a 1 Gbps Ethernet service, for which the monthly core recurring charge is calculated according to the proportion of fibres that an Access Seeker uses at a specific Distribution Cabinet and the cost of Telecom active equipment in the Exchange.

221. The Commission is required under the Act to determine the price for the Sub-loop Backhaul Service in accordance with the IPP.[93] As discussed below, the Commission has encountered real practical difficulties in attempting to apply a natural and ordinary interpretation of the IPP. However, the Commission has sought to apply the IPP where relevant information is available, and select the approach that best gives, or is likely to best give, effect to the purpose set out in section 18 of the Act. In doing so, the Commission has given particular attention to the manner in which Telecom (Chorus) has proposed to build the service, and how this differs to the available benchmark services that were used in order to determine charges for the UCLL Service and the UCLL Backhaul Service.

Description of the Sub-loop Backhaul Service

222. In the draft STD the Commission proposed an SFP-to-SFP service where key components of the Sub-loop Backhaul Service were the fibre link between the Distribution Cabinet and the Exchange, and SFPs, which interfaced between each end of the fibre and the Access Seeker equipment.[94] The Commission proposed that while Telecom would provide the fibre link, the SFPs at each end could be provided by either the Access Seeker or Telecom.

223. Vodafone and Orcon/Kordia/CallPlus supported the service as set out in the draft STD, on the grounds that it would offer Access Seekers the flexibility to differentiate the services they offer End Users, including providing higher-bandwidth services.[95]

224. Telecom (Chorus), Telecom (Group), Vector and TelstraClear submitted that the Commission should revert back to the TCF-agreed service description, because the proposed service provided access to Telecom's infrastructure rather than

[93] Telecommunications Act 2001, s 30P.
[94] Commerce Commission, *Draft Sub-loop Services STD*, 5 September 2008, p 95-96.
[95] Vodafone, *Submission on the draft Sub-loop Services STD*, 15 October 2008, p 13; Orcon, Kordia and CallPlus, *Submission on the draft Sub-loop Services STD*, 15 October 2008, p 10-11.

transmission capacity as required under the Act, and was inconsistent with the service stipulated under previous UBA/UCLL Backhaul STDs.[96]

225. Orcon, Kordia and CallPlus cross-submitted that the Commission is obligated to amend the agreed TCF position if it is for the long-term benefit of End Users. They further commented that the Act describes the service as one "that provides transmission capacity in Telecom's network (whether the transmission capacity is copper or fibre or anything else)", which they did not consider to necessarily mean only services *over* copper or fibre. Accordingly, they considered the service as set out in the draft STD to be consistent with the Act.[97]

226. Other key specific concerns raised by Telecom (Group) and Telecom (Chorus) were that the SFPs were not located between the handover points of the service, that it would be impractical for Telecom to provide the SFPs to Access Seekers (which other parties agreed with), that Telecom would have no visibility over this part of the network in order to address faults, and that Telecom would not have any control over the transmission capacity as the Access Seeker could replace the Telecom-supplied SFP with a higher bandwidth device.[98]

227. In summary, submitters generally characterised the service as set out in the draft STD as being a 'dark fibre' service. However, the service description in the Act specifically states that this is a service that provides transmission capacity in Telecom's network. While, the Commission does not consider the service proposed in the draft STD to be a 'dark fibre' service (due to the presence of active equipment at either end) it has become apparent that there are significant practical issues associated with Telecom providing and managing the SFPs.

228. Accordingly, the Commission has determined that the Sub-loop Backhaul Service provides transmission capacity as an Ethernet connection with an optical interface. Implicit in this description is the presence of Telecom active equipment at the Exchange only (either as a media converter or an Ethernet switch) which would limit bandwidth and enable management of the service. This equipment circumvents the impracticalities of Telecom having to provide an SFP that connects to Access Seeker equipment and enables Telecom sufficient capability to effectively monitor/control the bandwidth used by the Access Seeker and better manage faults.

229. In making this determination, the Commission is required to best give effect to section 18 of the Act. The Commission notes, as did some submitting parties, that the legislative service descriptions set out for the Sub-loop Backhaul Service and UCLL Backhaul Service are very similar. In fact, the only material difference between the two service descriptions is the handover points. However, the Commission also recognises that there are very real practical

---

[96] Telecom (Chorus), *Submission on the draft Sub-loop Services STD*, 15 October 2008, p 36; Telecom (Group), *Submission on the draft Sub-loop Services STD*, 15 October 2008, p 37-40; Vector, *Submission on the draft Sub-loop Services STD*, 15 October 2008, p 14-15; TelstraClear, *Cross-submission on the draft Sub-loop Services STD*, 31 October 2009, p 5.

[97] Orcon, Kordia and CallPlus, *Cross-submission on the draft Sub-loop Services STD*, 31 October 2008, p 19-20.

[98] Telecom (Group), *Submission on the draft Sub-loop Services STD*, 15 October 2009, p 39-40; Telecom (Chorus), *Submission on the draft Sub-loop Services STD*, 15 October 2009, p 34-35.

differences in how the Sub-loop Backhaul Service and the UCLL Backhaul Service operate, and accordingly in how Telecom plans to build and implement each service. The Commission considers that it must interpret the service description set out in the Act based on the practical context in which the legislative service description applies. Only this approach to the interpretation of the service description ensures that the Commission is making the determination that is likely to best give effect to section 18 of the Act.

230. The Sub-loop Backhaul Service provides transmission capacity between the Access Seeker active equipment in the Distribution Cabinet (e.g., the Access Seekers DSLAM) and a Telecom-owned media converter or Ethernet switch in the Exchange.[99] Telecom (Chorus) indicated that it intends to provide the Sub-loop Backhaul Service using *dedicated* fibre (i.e., where separate fibre is used to provide each unique Sub-loop Backhaul Service) over distances mostly between 0-5 km.

231. In comparison, the UCLL Backhaul Service entailed providing active equipment at both ends of the service, across shared fibre, and over distances that are generally much greater than 5 km. Accordingly, the Sub-loop Backhaul Service differs from the UCLL Backhaul Service in that it:

- is to be provisioned using dedicated fibre, as opposed to shared fibre;
- is typically supplied over distances of up to 5 km, as opposed to the UCLL Backhaul Service which is typically supplied over much longer distances; and
- only includes Telecom active equipment at the Exchange end of the service, whereas UCLL Backhaul includes active equipment at both ends of the service.

232. Such differences have the potential to impact on the cost drivers of the Sub-loop Backhaul Service (when compared to the UCLL Backhaul Service), and therefore also impact on an efficient price for provision of that service (i.e., a price that reflects the efficient costs of providing the service). For example, as discussed below, bandwidth is a cost driver for the UCLL Backhaul Service, but as it uses a dedicated fibre bandwidth is not a driver of cost for the Sub-loop Backhaul Service (up to the 1 Gbps permitted by the Ethernet switch).

233. As discussed further below, the Commission considers that it would be inappropriate to base its benchmarks on those used for a very different service with very different cost drivers. The Commission is required to best give effect to section 18 of the Act and considers that it would not be doing so if it ignored these very significant differences in actual composition of the Sub-loop Backhaul Service compared to the benchmarked services used in the UCLL Backhaul STD. These issues are discussed further in the following paragraphs in relation to the core charges for the Sub-loop Backhaul Service.

[99] Telecom (Chorus), *Letter responding to the Commerce Commission's request in regard to the draft Sub-loop Services STD*, 28 November, p 2-3; Sub-loop Services Conference, *Transcript*, 8 December 2008, p 128-130.

234. In the third round of consultation on the Sub-loop Backhaul Service, Telecom (Group) submitted the Sub-loop Backhaul Service would probably require active equipment at both ends when the service when the service is finally designed.[100] The Commission considers that this is unlikely given that:

- this is not how Telecom has provided the service to itself prior to the STD being released;
- this is unlikely to be the most efficient way of providing the service, given the minimum of 12 number of fibres available at each cabinet (and that there is likely to be more than this on average);
- Telecom (Wholesale) may wish to, and has submitted that it may, provide a different commercial service for backhaul, that uses the regulated service;[101] and
- Telecom (Chorus), as the Telecom business unit responsible for designing and provisioning this service, has indicated that the service would not entail Telecom active equipment at the Distribution Cabinet. Furthermore, Telecom (Chorus) has provided specific information on the specific costs of providing lower bandwidth services of 25 Mbps and 50 Mbps, and these costs only relate to the active equipment in the Exchange.[102]

235. Accordingly, the Commission has determined that the Sub-loop Backhaul Service provides transmission capacity as an Ethernet connection with an optical interface. The Commission has also determined an efficient price based on the service being provided over a dedicated fibre with active equipment at the Exchange only.

236. Furthermore, as noted in paragraphs 307 to 311, bandwidth is not a significant cost-driver of the Sub-loop Backhaul Service at speeds of up to 1 Gbps. Consequently, the Commission has determined that there should only be a single bandwidth option of 1 Gbps.[103]

Sub-loop Backhaul Service Monthly Rental

Position set out in the draft STD

237. The Sub-loop Backhaul Service provides transmission capacity across the equivalent to the feeder portion of the UCLL Service (i.e., between the Distribution Cabinet and the Exchange). For the purposes of the Sub-loop Backhaul Service, the transmission medium is fibre.[104] In the draft STD the Commission determined a monthly recurring charge for the Sub-loop MPF Service by benchmarking the proportion of the rental full UCLL MPF Service

[100] Telecom (Group), *Submission on Sub-loop Services consultation material*, 4 May 2009, p 22-23.
[101] Telecom (Wholesale), *Letter responding to the Commerce Commission's request in regard to the draft Sub-loop Services STD*, 28 November, p 4.
[102] Telecom (Chorus), *Sub-loop Service STD Post-Conference Information Request*, 19 December 2008, p 6.
[103] The UCLL Backhaul STD provides for bandwidth options of 100 Mbps and 1 Gbps.
[104] According to the Act, the backhaul service from the cabinet to the Exchange may be copper, fibre or any other medium.

that is attributed to the Sub-loop MPF rental in other jurisdictions. This resulted in a Sub-loop MPF rental that is 60.4% of the full UCLL MPF rental. The remainder of the UCLL rental (39.6%) relates to the copper-based feeder that also provides transmission between the Distribution Cabinet and the Exchange.

238. In the draft STD the Commission noted that under Telecom's cabinetisation programme, the copper-based feeder is replaced by fibre. The Commission also noted that the cost of providing a fibre-based transmission capacity service from the Distribution Cabinet to the Exchange should be less than the cost of a copper-based feeder. This was based on the view that trenching costs represent a significant component of the feeder network (and do not vary according to whether fibre or copper cables are being laid), and fibre cable costs are typically lower than copper cable costs (given differences in the cost of materials and that more customers can be served over a fibre than a copper line). As a result, when considering how to determine a price for the Sub-loop Backhaul Service in the draft STD, the Commission placed some weight on ensuring that the resulting combination of the Sub-loop Backhaul and Sub-loop MPF charges were no higher than the full UCLL line rental.

239. In the draft STD, the Commission considered three different possible benchmarking approaches for the Sub-loop Backhaul Service. In each case, the Commission compared the combination of the Sub-loop MPF price and the Sub-loop Backhaul price with the full UCLL price, on the basis that the Sub-loop Backhaul Service is essentially a fibre replacement of the feeder link between the Distribution Cabinet and Exchange.

240. The first approach involved applying the same pricing methodology that had been developed as part of the UCLL Backhaul STD (i.e., backhaul from the Exchange to a point of interconnection). This involved a regression-based pricing formula, where the recurring charge was estimated as a non-linear function of distance and bandwidth. The average Sub-loop Backhaul link (the average distance between a Distribution Cabinet and Exchange) was estimated by the Commission to be 2.5 kms, based on data supplied by Telecom (Chorus). Given the backhaul bandwidths proposed by Telecom (Chorus) of 100Mbps and 1Gbps, the resulting Sub-loop Backhaul prices were estimated ($964 and $2,344 per month, respectively).

241. However, the Commission found that the resulting combination of the monthly Sub-loop MPF rental and the monthly backhaul charge substantially exceeded the full UCLL price. Therefore, the Commission concluded that such pricing of the Sub-loop Backhaul Service was not likely to promote efficient entry for the long-term benefit of End Users.

242. The second approach the Commission considered was benchmarking using a cabinet-based backhaul service offered by KPN in the Netherlands and concluded that, although the combination of Sub-loop prices was below the full UCLL price, there was considerable imprecision associated with benchmarking against the KPN service, particularly as KPN was removing exchanges and hence supplying backhaul over longer distances than the average Sub-loop Backhaul distance in New Zealand.

243. The final approach considered by the Commission in the draft STD was to benchmark the likely components of the Sub-loop Backhaul Service, namely the fibre link and the cost of the equipment ("SFPs") used to light the fibre and provide transmission capacity. The Commission could only identify a single fibre benchmark (in Germany), which when adjusted for currency and distances, resulted in a monthly rental of $142 per fibre and $281 per fibre pair.[105] The draft STD also noted that the SFP costs are likely to be approximately $32 per month.[106] The resulting combination of Sub-loop MPF and Sub-loop Backhaul prices was between 8% and 29% below the full UCLL price. The Commission's preliminary view in the draft STD was that this final approach should be adopted.

Submissions on the position set out in the draft STD

244. Submissions from Vodafone, Covec and Orcon/Kordia/CallPlus considered that the approach taken in the draft STD was reasonable given the limited ability to benchmark.

245. Telecom (Chorus), LECG, Telecom (Group), TelstraClear and Vector disagreed with the approach taken in the draft STD, and instead recommended that the Sub-loop Backhaul price be set according to the methodology that was used in the UCLL Backhaul STD.

246. A key argument in submissions opposing the approach taken in the draft STD was that a single benchmark was used, which increased the uncertainty around the resulting price.

247. A more detailed summary of these submissions in provided in Appendix B.

Second round of consultation – 30 January 2009

248. Following the Sub-loop Services Conference, the Commission released a further consultation document[107] on 30 January 2009 in which it acknowledged that the initial approach taken in the draft STD may not result in an efficient price for the Sub-loop Backhaul Service, given that it relied on a single price benchmark. However, the Commission expressed a number of concerns over the use of the UCLL Backhaul pricing model (i.e., the first option considered under the draft STD), which had been proposed as the alternative pricing methodology, for the Sub-loop Backhaul Service. The Commission stated that:[108]

> These concerns relate to several aspects of the benchmarking process required by the Initial Pricing Principle ('**IPP**'), including comparability of jurisdictions and similarity of the underlying services.
>
> In addition, it appears that the average backhaul revenue earned by Telecom would vary substantially under the UCLL Backhaul pricing methodology, compared to what Telecom

[105] The Commission noted that commercial unbundled dark fibre prices in the US (where fibre is generally regarded as being competitive) ranged from $128-$268 per fibre pair.
[106] Based on annualising an SFP cost of $500 per end.
[107] Commerce Commission, *Sub-loop Backhaul pricing and related service description issues*, 30 January 2009.
[108] ibid, para 9-10.

> would otherwise have earned under the UCLL Service. ... This potential for very significant under-recovery or over-recovery of costs brings into question whether use of UCLL Backhaul prices in the Sub-loop context promotes dynamic or static efficiency, respectively, and whether it would therefore be consistent with Section 18 of the Act.

249. In light of these concerns around the application of section 18 of the Act, the Commission proposed and consulted on a new approach.

250. The Commission proposed an approach that combined benchmarking (where suitable information was available) with information supplied by Telecom regarding actual costs (where suitable benchmarking information was not available).[109]

251. In the 30 January 2009 consultation, the Commission referred to the service description of the Sub-loop Backhaul Service in the Act:

> A service (and its associated functions, including the associated functions of Telecom's operational support systems) that provides transmission capacity in Telecom's network (whether the transmission capacity is copper, fibre, or anything else) between the handover point in Telecom's Distribution Cabinet (or equivalent facility) and the handover point in Telecom's local telephone exchange (or equivalent facility), for the purposes of providing access to, and interconnection with, Telecom's unbundled copper local loop network (including any necessary supporting equipment).

252. The Commission noted that the key cost components of deploying a fibre-based network between the Distribution Cabinet and the Exchange are trenching costs, fibre cable costs, and the costs of pulling fibre through existing ducts (where available).[110] The Commission initially established a benchmarked price for a copper-based transmission service between the Distribution Cabinet and the Exchange. This was determined as the difference between the Sub-loop UCLL price and the full UCLL price, which in the case of urban areas, is $7.85 per line per month (or 39.6% of the full UCLL price).

253. The Commission then proposed adjusting this to reflect the fact that the Sub-loop Backhaul Service involves fibre-based, rather than copper-based, transmission. The majority of the costs of a transmission service relate to the digging of the trench into which the copper or fibre cables are laid. The Commission used a trench proportion of 75%,[111] which resulted in an average trenching cost per cabinet of $1,236 per month.

254. The Commission then included the costs that Telecom incurs in deploying fibre, most of which is being drawn through existing ducts. These costs included the weighted average cost of the fibre cable,[112] the costs of pulling the cable through the ducts, and where necessary, the cost of new trenches (presumably to extend the network). The Commission estimated that the resulting fibre investment

---

[109] Commerce Commission, *Sub-loop Backhaul pricing and related service description issues*, 30 January 2009.

[110] In a further consultation in April 2009, which is discussed further below, the Commission also took into account the cost of the equipment required to provide the backhaul service.

[111] As noted in the 30 January 2009 consultation material (pages 4-5), this was based on statements from Ofcom and Telecom.

[112] The size of the fibre cables being deployed by Telecom vary, so the Commission derived a weighted average, based on relative distance.

(including new trenches) between the Distribution Cabinet and the Exchange would be just over $165 million. This investment was amortised, and following an allowance for operational costs of 12% and common costs of 10%, the average fibre-related cost was estimated to be $647 per cabinet per month.

255. The Commission then made an allowance for the higher risk associated with setting a regulated price for a new fibre-based service.[113] The resulting average backhaul cost was $2,166 per month for urban cabinets and $3,452 of non-urban cabinets.

256. The Commission proposed that the average backhaul cost per cabinet could be recovered across either:[114]

- the number of fibres used at that specific cabinet; or
- the average number of fibres used at all active cabinets to give a national urban and non-urban price.

257. Under the first option the Sub-loop Backhaul price would vary between cabinets according to the number of parties using the service. This is the same methodology proposed for determining the price for the Sub-loop Co-location Service (where the average costs of a cabinet are shared between parties that use that cabinet). Under the second option the Sub-loop Backhaul price would not vary between cabinets in this way.

258. In addition to the recurring charge, the 30 January 2009 consultation material addressed the connection charge for the Sub-loop Backhaul Service. The Commission noted that there had been considerable discussion at the Sub-loop Services Conference on whether the $4,030 non-recurring connection charge for each end of the UCLL backhaul service should apply to the Sub-loop Backhaul Service, given that active Telecom equipment will only be present at one end of the service. The Commission referred to comments by Telecom (Chorus) at the conference that the $4,030 charge may not be applicable where there is no active Telecom equipment.

259. The Commission considered that the UCLL Backhaul connection fee for the Exchange end of the service would be sufficient to compensate Telecom for the costs of active equipment at the Exchange. Accordingly, the Commission proposed that the connection charge at the Exchange end of the Sub-loop Backhaul Service should be $4,030, and less at the Distribution Cabinet where Telecom does not supply active equipment. Based on information provided by Telecom (Chorus),[115] the Commission estimated the average cost of connecting the backhaul fibre to the cabinet to be $1,068.42.

---

[113] Specifically, the feeder benchmark of 39.6% was adjusted upwards.

[114] The 30 January 2009 consultation paper proposed two approaches to recovering the average backhaul cost: based either on the actual number of fibres used at each cabinet, or on an average number of fibres used.

[115] Telecom (Chorus), *Letter responding to the Commerce Commission's request in regard to the draft Sub-loop Services STD*, 28 November 2008.

260. The Commission received submissions and cross-submissions from Vodafone, Orcon, Covec, Telecom (Chorus), Telecom (Group), NERA, and Vector.[116] These submissions are summarised in Appendix B.

Third round of consultation – 20 April 2009

261. One of the key points raised by submitters in response to the 30 January 2009 material was that the cost of the active backhaul equipment should be recovered through the recurring charge for the Sub-loop Backhaul Service as this was the case for the benchmarks used in determine the UCLL Backhaul prices. Specifically, Telecom (Chorus) noted that:[117]

> The provision of Access Provider electronic equipment at either end of the UCLL Backhaul link is included in the regression analysis used to price UCLL Backhaul, as the service being benchmarked is a point to point Ethernet service (which requires this electronic equipment). LECG described the components of the UCLL Backhaul benchmarks in a report on the Commission's UCLL Backhaul Draft STD. So, these costs are germane to the Sub-loop UCLL Backhaul recurring charge and are within the scope of the Commission's costing exercise.

262. This proposition was confirmed by the fact that the recurring charges set by Bell Canada for the Ethernet Transport service (which was a UCLL Backhaul benchmark and the median point used to set the non-recurring charge) included the cost of active equipment. Accordingly, the Commission sought information from Telecom in relation to an appropriate mark-up to the recurring charge for active equipment costs at the Exchange end of the service.

263. The Commission used information from Telecom (Group) to derive a cost of active equipment of $375 per month, or $430 per month if the cost of Telecom's lawful intercept functionality[118] is included. The Commission used this information in consulting on two refined options to Sub-loop Backhaul pricing in its third round of consultation on the Sub-loop Backhaul Service on 20 April 2009.

264. The two options included:

- a fibre-based pricing model where the recurring charge was set by dividing the average cost of fibre links between the Distribution Cabinet and the Exchange by the number of fibres used at that specific cabinet, and adding the charge of $430 per month for active equipment; and
- a modified UCLL Backhaul pricing model where the estimated cost of Telecom's active equipment was deducted from the benchmark prices, on the basis that the Sub-loop Backhaul Service has Telecom active equipment at only one end rather than both ends.

265. Submissions on these approaches are summarised in Appendix B.

---

[116] A submission was also received from TelstraClear, although this only related to space allocation.
[117] Telecom (Chorus), *Submission on Sub-loop Services consultation material*, 4 May 2009, para 102.
[118] Lawful intercept is the obligation on Telecom, and other network operators, to provide the capability for interception of telecommunications traffic on their network by relevant agencies, in accordance with the Telecommunications (Interception Capability) Act 2004.

Decision on Sub-loop Backhaul pricing model

266. The Commission considers that the Sub-loop Backhaul pricing will be determined in accordance with the fibre-based pricing model outlined above.

267. In reaching a decision on the preferred approach, the Commission has reviewed the options in terms of both the IPP and section 18 of the Act. The Commission considers that it is not practically possible, given the limited information available, to adopt an approach that fully complies with a natural and ordinary interpretation of the IPP. As a result, both the fibre-based pricing model and the UCLL Backhaul pricing model fail to fully apply the IPP in a natural and ordinary way.

268. However, the Commission has a number of additional concerns regarding the UCLL Backhaul pricing model which suggest that it is not appropriate for the Sub-loop Backhaul Service. In particular the Commission is concerned to recognise the practical differences between the UCLL Backhaul Service and the Sub-loop Backhaul Service, and resulting differences in cost drivers. These differences create the potential for over-recovery or under-recovery of costs under the UCLL Backhaul pricing model.

269. The Commission considers that the fibre-based pricing model is a more cost-based approach, and accordingly is more likely to set an efficient price for the Sub-loop Backhaul Service. This approach is therefore likely to best promote competition for the long-term benefit of End Users, as required by the Act, and give effect to the underlying intention of the IPP (despite the necessity of departing from a natural and ordinary interpretation).

270. The reasons for the Commission's decision are outlined in detail below.

General approach – IPP

271. Under section 30P(1)(c) of the Act the Commission must include in the STD for a designated service (such as Sub-loop Backhaul) the price or prices determined by the Commission in accordance with the applicable IPP. The Act describes the IPP for the Sub-loop Backhaul Service as follows:

> Benchmarking against prices for similar services in comparable countries that use a forward-looking cost-based pricing method.

272. The IPP can be broken down into its four key component parts:

- benchmarking;
- similar services;
- comparable countries; and
- a forward-looking, cost-based pricing method.

273. The Commission notes that there was significant debate among submitters on exactly what is required for a price to be determined in accordance with the IPP.

On the issue of the benchmarking component of the IPP, for instance, Telecom (Group), Telecom (Chorus) and Vector do not consider the fibre-based pricing model to be consistent with the IPP because it benchmarks a component of the service rather than relying on benchmarks derived directly from similar services.[119] Conversely, Covec submitted that, in its simplest form, benchmarking as required by the IPP means using a sample of data to generate an unknown quantity, which it considers the Commission had done with the fibre-based pricing model.[120]

274. Vector submitted that the proper test for the Commission to apply is a holistic one, as each component part of the IPP relies on the others. Vector provided the example that compliance with a forward-looking, cost-based methodology may or may not rely on benchmarking of prices for similar services in comparable countries, and therefore may or may not properly apply the IPP.[121]

275. However, Vector also noted in its submission that the IPP could be broken down into its component parts, and suggested that doing so could be a useful analytical tool for assessing compliance with the IPP.[122]

276. The Commission agrees with Vector's submission that while the IPP can be broken down into component parts for the purpose of analysis, it must be applied holistically.

277. Accordingly, the Commission has sought to apply a natural and ordinary interpretation of the IPP as a whole in determining the price for the Sub-loop Backhaul Service, rather than applying each of the individual component parts of the IPP. Throughout the STD process under the Act, the Commission has striven to apply a natural and ordinary meaning of the IPP to the Sub-loop Backhaul Service, but has encountered very real practical difficulties with doing so. Indeed, the Commission considered a number of different approaches to applying the IPP, including the UCLL Backhaul pricing model and the fibre-based pricing model. The Commission notes that it has consulted extensively with interested parties on this issue in an effort to resolve these difficulties.

278. However, the Commission considers that each approach has limitations in terms of a natural and ordinary approach to the IPP. The primary issue is that neither the Commission nor any other submitter has been able to identify services that are sufficiently similar to the Sub-loop Backhaul Service to apply under the IPP.[123] As a result, the Commission has simply not been able to undertake a traditional benchmarking exercise as required by the IPP.

279. Given this constraint, the Commission has sought to apply a natural and ordinary interpretation of the IPP to the extent possible within the limits of the

---

[119] Telecom (Group), *Submission on Sub-loop Services consultation material*, 4 May 2009, p 19-21; Telecom (Chorus), *Submission on Sub-loop Services consultation material*, 2 March 2009 ; Vector, *Submission on Sub-loop Services consultation material*, 4 May 2009, p 8.
[120] Covec, *Submission on Sub-loop Services consultation material*, 4 May 2009, p 6.
[121] Vector, *Submission on Sub-loop Services consultation material*, 4 May 2009, p 6.
[122] ibid, 4 May 2009, p 6.
[123] While the Commission's preliminary view in the draft STD was that the KPN service was a potential similar service, this was not the case given differences in active equipment and distance as discussed in paragraphs 286 to 292.

information available. Where the Commission has been unable to apply the IPP in this way it has sought to give effect to the underlying intention of the IPP to provide a timely mechanism to reach an efficient price in accordance with section 18 of the Act. In taking this approach, the Commission identified the modified UCLL Backhaul pricing model and the fibre-based pricing model as potential options.

280. Given the disagreement among submitters on what is required to apply the IPP and the practical difficulties the Commission has encountered in its attempts to apply a natural and ordinary interpretation of the IPP, the Commission considers that an analysis of the component parts of the IPP is useful to help examine the advantages and disadvantages in using either the modified UCLL Backhaul pricing model or the fibre-based model.

Benchmarking

281. The first key component of the IPP for the Sub-loop Backhaul Service is benchmarking against prices. The Commission considers that benchmarking is used in this context as a means of applying an objective measure of the efficient price for provision of a regulated service.

282. In previous STDs, the Commission has sought to apply an objective measure to determine efficient prices even where it has encountered difficulties with benchmarking against prices. In the UCLL Co-location STD, the Commission benchmarked a pricing methodology rather than actual prices because those prices were unavailable.[124]

283. The Commission considers that the fibre-based pricing model does not fully apply the requirement in the IPP to benchmark against prices as only one element of the service is benchmarked (i.e., the trenches and ducts). However, the Commission considers that the fibre-based approach still involves a significant benchmarked component, as the trenching costs, which account for the majority of the cost of the service, are based on the benchmarked feeder proportion of the UCLL price that lies between the Distribution Cabinet and Exchange.

284. The Commission considers that the modified UCLL Backhaul pricing model also does not fully apply the requirement in the IPP to benchmark against prices as a cost-based deduction is required to be applied to the benchmarks in order to reflect that equipment is only supplied at one end of the service. However, again the Commission considers that this approach involves a significant benchmarked component.

285. Accordingly, the Commission considers that both the fibre-based approach and the UCLL Backhaul approach contain a significant portion of benchmarked prices. However, neither approach fully involves a traditional benchmarking exercise, and as a result neither approach can be said to involve pure benchmarking on a natural and ordinary understanding of the IPP. While

[124] Commerce Commission, *Decision No. 610: Standard Terms Determination for the designated service Telecom's unbundled copper local loop network co-location*, 7 November 2007.

acknowledging this limitation, the Commission considers that both approaches incorporate to a significant extent, given the information available, an objective measure of price based on benchmarking.

Similar services

286. The IPP requires the Commission to identify similar services against which to benchmark. The Commission considers that the similar services component is intended to support the reliability of any benchmarking undertaken so that the IPP more closely matches an efficient price for provision of the regulated service.

287. The Commission does not consider the UCLL Backhaul pricing model to be consistent with the similar service component of the IPP because the UCLL Backhaul benchmarks are not similar services to the Sub-loop Backhaul Service. The UCLL Backhaul approach does not benchmark against prices for similar services as Access Provider equipment is only present at one end of the Sub-loop Backhaul Service, rather than at both ends in the case of many of the UCLL Backhaul benchmarked services.

288. An adjustment to deduct the cost of active equipment at one end of the service would therefore need to be made to the UCLL Backhaul pricing model, in order to ensure that it represented benchmarking against similar services. However, making a cost-based adjustment to the benchmarks to make these services more similar would, by definition, mean that the UCLL Backhaul approach would not apply other components of the IPP, and in particular would depart further from a natural and ordinary approach to benchmarking as required by the IPP.

289. Covec, Vodafone and Orcon/Kordia/CallPlus also considered that the distances of the services used in the UCLL Backhaul benchmarking exercise were sufficiently longer than the distances for the Sub-loop Backhaul Service to warrant considering those services as not being sufficiently similar for the purposes of benchmarking in accordance with the IPP.[125] The Commission considers this submission to be correct.

290. As noted in paragraph 224, several parties have argued that the Sub-loop Backhaul Service description as set out in the Act is ostensibly the same as that for UCLL Backhaul, and that the Commission should maintain the same service description and pricing approach in the Sub-loop Services STD as that used in the UCLL Backhaul STD.

291. Similarities in the service description of the regulated services is a factor that the Commission has considered. However, the Commission considers that it is required to take into account other very real differences in how the Sub-loop Backhaul Service is being built by Telecom (i.e., as a dedicated fibre service with the incumbent equipment at one end only and at shorter distances) compared to the services used to benchmark the UCLL Backhaul regression formula (i.e., incumbent active equipment at both ends over much longer

[125] Covec, *Submission on Sub-loop Services consultation material*, 4 May 2009, p 4; Vodafone, *Submission on Sub-loop Services consultation material*, 4 May 2009, p 4; Orcon, Kordia and CallPlus, *Submission on the draft Sub-loop Services STD*, 15 October 2009, p 10.

distances). Such differences impact on the cost drivers of the Sub-loop Backhaul Service, and therefore undermine the degree to which that service is similar to the services used as benchmarks under the UCLL Backhaul pricing model.

292. The Commission considers that the benchmarked element of the fibre-based pricing model applies the similar service component of the IPP in relation to the trenches and ducts. The trench/duct element that the Commission has benchmarked is derived from the UCLL STD price, which entailed a copper-based feeder service. Accordingly, the Commission considers that a copper-based feeder service is a similar service for the purposes of the IPP, especially given that the majority of the trenches used in the FTTN deployment were used for the UCLL service.

Comparability

293. The IPP requires the Commission to identify comparable countries. The Commission generally considers that the comparability component is an important means of ensuring the reliability of any benchmarking undertaken.[126]

294. The UCLL Backhaul approach and the fibre-based approach take aspects of the UCLL Backhaul price and UCLL price, respectively. Given that the UCLL Backhaul and UCLL prices were based on an assessment of comparability, the Commission considers that both approaches properly apply the comparability criteria of the IPP for the component of each price that is benchmarked.

Cost-based

295. The forward-looking, cost-based component of the IPP sets out the type of price that the Commission is required to apply under the IPP. This is significant because, while the other components of the IPP require a particular methodology, the forward-looking, cost-based component of the IPP suggests the nature of the price that is to be determined.

296. The Commission considers that this is an important point, as the underlying intent of the pricing principles in the Act (both the IPP and the final pricing principle - FPP) is to establish an efficient price for provision of the Sub-loop Service.[127] The scheme of the Act therefore suggests that a forward-looking, cost-based price is an efficient price for provision of the Sub-loop Services, including the Sub-loop Backhaul Service.

297. The benchmarked elements in both the fibre-based approach and the UCLL Backhaul approach are derived from the UCLL STD and UCLL Backhaul STD, both of which set forward-looking, cost-based prices. Accordingly, the Commission considers that both approaches apply the forward-looking, cost-based component of the IPP.

---

[126] Commerce Commission, *Decision No. 627: Standard terms determination for the designated service Telecom's unbundled bitstream access backhaul*, 27 June 2008, p 28.
[127] *Telecom New Zealand Ltd v Commerce Commission,* CA75/05, 25 May 2006, para 15.

298. The Commission also notes that its proposed adjustments to the two approaches involve adjusting the benchmarked price on the basis of information on Telecom (Chorus)'s actual costs, and are themselves consistent with a price that is cost-based. Accordingly, the Commission considers that the benchmarked element of the fibre-based approach applies the forward-looking, cost-based component of the IPP, and that the adjustments made were based on the costs that Telecom was deemed to incur in supplying the service. The Commission considers that this is appropriate where appropriate benchmark data is not available, and is consistent with the intention that these prices be cost-based.

Commission's decision

299. The Commission acknowledges that submitting parties have differing views in relation to whether the UCLL Backhaul and the fibre-based pricing models are consistent with the IPP. For example, Telecom (Group), in arguing that the Commission should adopt the UCLL Backhaul pricing model, submitted that "it is only appropriate to depart from the IPP in very rare instances and they do not apply here – there are relevant benchmarks available". However, the Commission considers that the UCLL Backhaul benchmarks do not fully apply the similar service component of the IPP, and neither the UCLL Backhaul pricing model nor the fibre-based pricing model fully apply the benchmarking component of the IPP even though both approaches have a significant benchmarking element.

300. The practical difficulties the Commission has encountered in terms of identifying appropriate benchmarks based on similar services in comparable countries means that neither the UCLL Backhaul pricing model nor the fibre-based pricing model fully applies the IPP according to a plain and ordinary meaning of that IPP.

301. However, the Commission considers that these two approaches to determining the price for the Sub-loop Backhaul Service apply a plain and ordinary interpretation of the IPP within the limits of the information available.

302. Where the Commission is required to depart from a natural and ordinary interpretation of the IPP because of practical limitations, the Commission considers that the focus of its enquiry should be to determine which approach is likely to best give effect to the purpose statement set out in section 18 of the Act. In this case, given that both pricing options require departing from a natural and ordinary interpretation of the IPP as neither approach fully applies the IPP's benchmarking requirement despite still having a significant benchmarking component, the Commission is required to select the option that best gives effect to the purpose set out in section 18 of the Act.

General approach – section 18

303. In selecting the preferred pricing model for the Sub-loop Backhaul Service, the Commission is required to select the option which is likely to best promote competition in telecommunications markets for the long-term benefit of End

Users.[128] This statutory requirement confers a degree of discretion on the Commission in terms of the range of factors that the Commission may take into account.

304. The specific factors that the Commission has consulted on and considered in assessing which pricing model is likely to best give effect to section 18 are:

- whether the resulting prices reflect the cost drivers of the service (*cost drivers*);
- whether the resulting range of potential prices reflect the actual costs of providing the service (*cost recovery*);
- impact on further investment in providing the service (*future investment*);
- impact on take-up of the service (*market entry*); and
- impact on innovation at the retail level (*new services and redundancy*).

305. While the Commission is generally free to determine the matters relevant to inform its assessment of what is likely to best promote competition for the long-term benefit of End Users, the Act does require the Commission to consider efficiencies as part of that assessment.[129] The Act does not define the efficiencies that the Commission is required to consider, but the Commission has interpreted this as a requirement to consider a range of efficiencies, including static (allocative and productive) and dynamic efficiencies.

306. In assessing efficiencies in the context of section 18 of the Act, the Commission considers that it must select the option that it considers to most effectively balance incentives for provision of the Sub-loop Backhaul Service and take-up of the service by Access Seekers. While the former factor ensures that the service will be provided where it is efficient to do so, Access Seeker take-up enables greater price and non-price competition at the retail level, which in turn leads to efficiency benefits. Fundamental to reaching this balance is that the regulated price reflects or provides a reasonable proxy of the efficient costs of providing the Sub-loop Backhaul Service. The Commission has considered efficiencies in respect of each of these section 18 factors it has identified above.

<u>Cost drivers – bandwidth and distance</u>

307. A key consideration in setting regulated prices is that the prices take into account the primary cost drivers of the service. If the regulated prices reflect incorrect cost drivers, there are heightened risks of inefficiencies from the increased potential for divergence between the costs of supplying the service and revenue generated by the service. Incorrect cost drivers can also result in inefficient decisions being made by Access Seekers in designing value-added products for End Users.

[128] Telecommunications Act 2001, s 19.
[129] Telecommunications Act 2001, s 18(2).

308. Under the UCLL Backhaul STD, benchmarked backhaul prices varied according to bandwidth and distances. However, Vodafone, Orcon and Covec submitted that bandwidth is not a cost-driver of the Sub-loop Backhaul Service, given that a dedicated fibre would be used for the Sub-loop Backhaul Service, regardless of the bandwidth used. This is a difference with benchmarked services underlying the UCLL Backhaul regression formula, which included incumbent active equipment at both ends of the fibre link that enabled the telecommunications traffic of multiple Access Seekers to be sent over shared fibres.

309. One of the reasons why Telecom (Chorus) considered that the UCLL Backhaul pricing model was preferable under section 18 of the Act, was that it encouraged Telecom to take a long-term view of bandwidth take-up. [130] However, the Commission considers that this is not a relevant consideration given that, within the bandwidths proposed (25 Mbps to 1 Gbps), bandwidth is not a significant cost-driver of the Sub-loop Backhaul Service.

310. The Commission considers that on the basis of Telecom's intended method for building the Sub-loop Backhaul Services, where each instance of the service requires dedicated fibre and Telecom ports (either in an Ethernet switch or media converter), the costs are unlikely to vary significantly by bandwidth up to 1Gbps. Furthermore, Telecom (Chorus) noted in relation to the costs of providing a 25, 50, 100, 200, 1000 Mbps Sub-loop Backhaul link that, while the differences are not really material, the lower bandwidths would require a more expensive non-standard media converter.[131] The Commission also considers that 1 Gbps is sufficient bandwidth for the purposes of the Sub-loop Backhaul Service for the foreseeable future.

311. Given that bandwidth is not a significant cost driver of the proposed service, the Commission considers that it is not required to vary the prices by bandwidth in order to give effect to section 18 of the Act.[132]

312. The other potential cost driver raised by parties is in relation to the distance of the service. Neither the Commission nor any submitter has challenged the proposition that distance is a cost driver of the Sub-loop Backhaul Service. However, Vector submitted that the UCLL Backhaul pricing model better accounts for distance, as the resulting prices vary according to the distance between the cabinet and Exchange.

313. The Commission considers that distance is also taken into account in the fibre-based approach albeit in an averaged sense, in the same way as the UCLL prices take distance into account. Furthermore, Telecom (Group) and (Chorus) both submitted that the average distance band for the UCLL Backhaul model should be 0-5 km, which results in the vast majority of Distribution Cabinets being subject to the same distance assumption in regards to the Sub-loop Backhaul

[130] Telecom (Chorus), *Submission on Sub-loop Services consultation material,* 20 April 2009, p 4.
[131] Telecom (Chorus), *Letter to the Commission regarding information requested at the Sub-loop Services Conference*, 19 December 2009, p 6.
[132] There may be a case for a higher equipment cost at the Exchange end for much higher bandwidths, such as 10 Gbps, given the cost of a 10 Gbps Ethernet port is higher than a 1 Gbps Ethernet port. However, the cost of the fibre used to provide the service would remain the same.

distance (i.e., an average of 2.5 km). This assumption of an average of 2.5 km is the same for the fibre-based pricing model.[133]

314. In summary, the Commission considers that the fibre-based pricing model is more reflective of the cost drivers of the Sub-loop Backhaul Service, given that it does not result in prices that vary by bandwidth.

Cost Recovery

315. Section 18 of the Act requires the Commission set an efficient price for the provision of the service. The Commission considers that there is implicit recognition in the Act that there is a higher degree of accuracy and a more efficient price associated with the FPP than the IPP due to its more sophisticated methodology.[134]

316. Furthermore, Telecom (Group) submitted that the IPP price can be seen as an approximation of the price set under the FPP, and that where it had the tools and jurisdiction to do so, the Commission should endeavour to minimise the difference between the price set using the IPP and price set using the FPP, in order to reduce regulatory uncertainty.[135]

317. Accordingly, the Commission considers that the potential for inaccuracy between the costs of providing the Sub-loop Backhaul Service and the regulated price of the service is an important consideration in setting an efficient price that best promotes competition for the long-term benefit of End Users, where insufficient information is available to implement a natural and ordinary meaning of the IPP.

318. In submissions, Telecom (Chorus) argued that the Commission's preferred method of determining the prices for the Sub-loop Backhaul Service did not adequately measure the real costs of providing the service.[136] In a similar vein, Telecom (Group) submitted that the Commission's approach was *ad hoc* and "assumption driven", rather than reflecting the underlying costs.[137] However, Telecom (Group) later submitted that a hybrid model like the fibre-based pricing model proposed by the Commission can result in more accurate prices than a simple benchmarking approach.[138]

319. The Commission has compared the two pricing models based on the risk of divergence between costs and revenue from regulated prices, considering issues such as the level of 'volume risk'[139].

---

[133] Other issues in relation to distance are discussed below, specifically in relation to cost recovery, network change and extension of the FTTN investment.
[134] See *Telecom New Zealand Ltd v Commerce Commission,* CA75/05, 25 May 2006, para 15.
[135] Telecom (Group), *Submission on Sub-loop Services consultation material,* 4 May 2009, p 21.
[136] Telecom (Chorus), *Submission on Sub-loop Services consultation material,* 2 March 2009, p 17.
[137] Telecom (Group), *Cross-submission on Sub-loop Services consultation material,* 20 March 2009, p 4.
[138] Telecom (Group), *Submission on Sub-loop Services consultation material,* 4 May 2009, p 19.
[139] The risk of variation in the Access Seeker take-up of the service that influences the degree to which the costs of provisioning the service are recovered.

Volume risk

320. Under the UCLL Backhaul pricing model the average backhaul revenue earned by Telecom would vary substantially, compared to what Telecom would otherwise have earned under the UCLL Service.

321. For example, Telecom (Wholesale) indicated at the Sub-loop Services Conference that it would use two 1Gbps backhaul links,[140] and the Commission understands that this is what has been typically provisioned internally within Telecom prior to this STD. Using the unmodified UCLL Backhaul pricing model, the price for each 1 Gbps link would be $2,344 per month, and so the total Sub-loop Backhaul charges would be $4,688 per month per Distribution Cabinet.

322. However, it was also indicated in subsequent submissions that Telecom (Wholesale) would likely use a single 50Mbps or 100Mbps Sub-loop Backhaul Service (and a separate service for fibre-based HSNS), but that future demand with VDSL2 for example would require greater bandwidth.[141] Using the unmodified UCLL Backhaul pricing model, the price for a 50Mbps backhaul service would be $738 per month and $964 per month for 100 Mbps (assuming the average distance of 2.5 km).

323. By comparison, under UCLL, Telecom would "earn" $7.85 per month per line (i.e., 39.6% x $19.84) from that portion of the UCLL service between the Distribution Cabinet and the Exchange, or approximately $1,650 per cabinet (given an average of 210 copper lines per cabinet). An example of the comparison between the charges under the UCLL Backhaul formula and the implied total charge per cabinet under UCLL (plus a mark-up for active equipment) is set out below in Table 3.

[140] Sub-loop Service Conference, *Transcript*, p 295.
[141] Telecom (Group), *Submission on Sub-loop Services consultation material*, 2 March 2009, p 10.

Table 3: Comparison of revenue generated using UCLL Backhaul prices for a Distribution Cabinet that is 2.5 km from the Exchange with the implied UCLL revenue (with a mark-up for active equipment at the Exchange)

Bandwidth	**50Mbps**	**100Mbps**	**200Mbps**	**1000Mbps**
Backhaul revenue under UCLL Backhaul approach	$738	$964	$1260	$2,344
UCLL implied revenue (with $430 for active equipment)	$1650 (plus $430 for active equipment) $2080	$1650 (plus $430 for active equipment) $2080	$1650 (plus $430 for active equipment) $2080	$1650 (plus $430 for active equipment) $2080
Ratio	35%	46%	60%	113%

Source: Commerce Commission, 2009

324. In addition to the potential for very significant under-recovery of costs as demonstrated in Table 3, there is also potential for significant over-recovery. The result of two parties purchasing a 1 Gbps service under the UCLL Backhaul model would be that two $2,344 services would be required, resulting in a revenue of $4,866 compared to $2,080. The gap may even be higher if these parties wished to have a redundant option (i.e., the two parties purchase two 1 Gbps services each) resulting in total Sub-loop Backhaul charges of $9,376 per cabinet compared to $2,080.

325. The very likely potential for either over- or under-recovery of costs raises significant questions regarding whether use of prices derived using the UCLL Backhaul model would promote dynamic or static efficiency, respectively, and whether it would therefore be consistent with section 18 of the Act, especially if an approach is available to the Commission that has much less inherent risk of variation.

326. The fibre-based pricing model allows much greater certainty of return on the investment in providing the Sub-loop Backhaul Service. Given that bandwidth is a negligible driver of cost in the proposed Sub-loop Backhaul Service (as dedicated fibres are used) and it creates the highest level of uncertainty, it is likely to be more efficient that the prices be set independent of bandwidth (within reasonable limits).

<u>Ability to reflect changes in costs associated with network changes</u>

327. The Commission has also considered whether the proposed prices would reflect potential network changes over time. Telecom (Chorus) has submitted that Telecom intends to re-parent cabinets to higher tier Exchanges in the future. This strategy would result in longer distances between the cabinet and its parent Exchange. Information to date indicates that of the 190 FTTN cabinets commissioned to 28 November 2008, 27 had been re-parented.[142]

[142] Telecom (Chorus), *Letter responding to the Commerce Commission's request in regard to the draft Sub-loop Services STD*, 28 November, p 8-13.

328. The fibre-based pricing model does not currently allow for increasing the distance (and therefore cost) between the cabinet and Exchange. A significant increase would result in Telecom under-recovering the costs for providing the service. A potential solution is to review the distance related component of the prices set under the fibre-based pricing model when a much greater database is available regarding the changes in distances. However, this should not be an issue for the foreseeable future given that the Commission has included the costs of new ducting and fibre deployment for Telecom's entire FTTN investment up until the end of 2011 at the very least.

329. In comparison, the UCLL Backhaul pricing model would be unlikely to accurately reflect the changes in distances, especially if the 0-5 km distance band was used, given that only comparatively large changes in distance would result in a change in price.

Other sources of difference between cost and price

330. Telecom (Chorus) submitted that the fibre-based pricing model does not approximate the price that would be derived under the FPP, and Telecom (Group) argued that the Commission's proposed fibre-based pricing model results in prices that are assumption-driven, rather than reflecting the underlying costs of providing the Sub-loop Backhaul Service.[143]

331. Simplifying assumptions are an important aspect of any approach to the IPP. The Commission notes that under the fibre-based pricing model there are a number of key areas of contention that would influence the final price, such as assumptions regarding duct sharing, the proportion of UCLL costs that are due to trenches and ducts, the WACC used for recovery of the FTTN investment (i.e., to deploy fibre and for the active equipment), and the risk adjustment to the trenching costs. However, the UCLL backhaul pricing model is also based on a number of important assumptions, including the average distance over which backhaul is available.

332. A potential source of error in applying the UCLL Backhaul formula is that the resulting prices are increasingly less accurate at shorter distances (as the benchmarks used to derive the pricing formula are for greater distances than the likely Sub-loop Backhaul distances). Covec and LECG have provided information on the increased inaccuracy of the UCLL Backhaul regression model in determining prices for shorter distances. The relative confidence intervals of the UCLL Backhaul pricing model, by distance and bandwidth, are set out in Figure 8. This data indicates a significant increase in the potential for regulatory error when applying the UCLL Backhaul pricing model to shorter distances.

333. Furthermore, LECG and Telecom (Group) considered that the modified UCLL Backhaul pricing model (to account for active equipment not being at one end of the service) would be insufficient to recover the costs of lower bandwidths at

[143] Telecom (Chorus), S*ubmission on Sub-loop Services consultation material*, 2 March 2009, p 15; Telecom (Group), *Cross-submission on Sub-loop Services consultation material,* 20 March 2009, p 4.

shorter distances.[144] The Commission considers that this point raises significant concerns about the accuracy of the UCLL Backhaul pricing model over shorter distances.

Figure 8: LECG graph of relative confidence interval width for prices from the UCLL Backhaul regression formula at different distances and bandwidths.

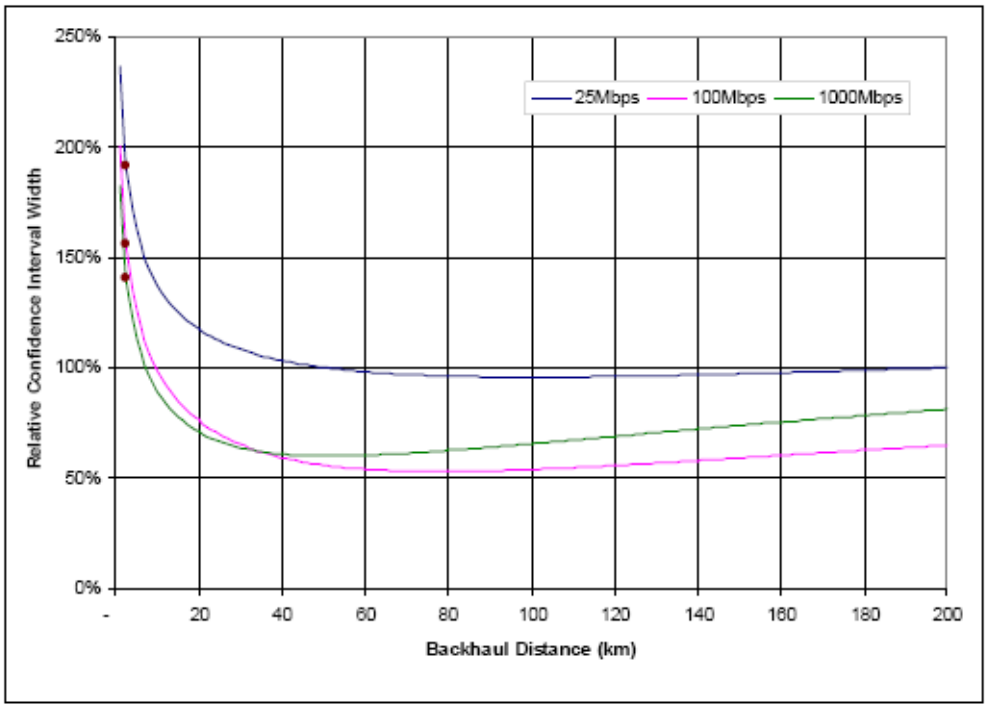

Source: LECG, 9 December 2008[145]

334. Furthermore, in making adjustments to the UCLL Backhaul regression formula to discount for Telecom not providing active equipment at the cabinet end of the service, the Commission would introduce more inaccuracy. While this is the only approach available to make such an adjustment (given the lack of information in relevant jurisdictions), there was concern raised at the potential source of error of applying such a deduction based on Telecom's costs to the prices in overseas jurisdictions.

Summary

335. Given the specific issues in relation to distance and active equipment costs in relation to the UCLL Backhaul pricing model, and that the fibre-based pricing model uses Telecom's actual FTTN investment costs, it is likely that the latter approach would be a more accurate reflection of the costs of providing the service. This is supported by Telecom (Group)'s submission that the fibre-based model can result in more accurate prices. Accordingly, the Commission's decision is that the fibre-based pricing model is consistent with a cost-based approach to pricing.

[144] LECG, *Appendix to Telecom (Chorus) submission on Sub-loop Services consultation material*, 4 May 2009, p 2; Telecom (Group), *Submission on Sub-loop Services consultation material*, 4 May 2009, p 22-23.
[145] LECG, *Response to issues in Covec submission*, 9 December 2008, p 7.

Future investment (in future FTTN or FTTC)

336. Telecom (Group), Telecom (Chorus) and Vector raised concerns that the Commission's fibre-based pricing model would prevent future deployment of Sub-loop Backhaul and competition in provision of the service.

337. Covec submitted that given the economies of scale associated with take-up of the Sub-loop Backhaul Service, it is not clear that competing investment in provision of the service would be highly beneficial to End Users, and that competition for End Users at the cabinet is more likely to generate the greatest benefit.[146]

338. In assessing these options against section 18 of the Act, the Commission notes that a significant barrier to investment in providing transmission capacity between the cabinet and Exchange is the risk that Telecom would not recover the efficient costs of providing the service. As noted in paragraph 325, the UCLL Backhaul pricing model (even if modified) has a significant risk of under-recovery should higher-bandwidth services not eventuate (or be significantly delayed). This would likely prevent future roll-out of the Sub-loop Backhaul Service, or provision of third party backhaul solutions where efficient, and would therefore not be in the interests of dynamic efficiency.

339. Telecom (Chorus) also submitted that the UCLL Backhaul pricing model would incentivise extension of Telecom's fibre network through investment in fibre-to-the-curb (FTTC) infrastructure.[147] This submission implies that Telecom (Chorus) considers that the UCLL Backhaul pricing model to be sufficient to recover the costs of providing transmission capacity from 'cabinets' located at the curb. At a high level, there are two potential issues with this premise.

340. First, the Commission understands that the cost calculations that lead Vector to draw the conclusions that the proposed price prohibits third party backhaul[148] are based on an unrealistic assumption that each cabinet would have their own dedicated trenchline to the Exchange which would be an inefficient scenario and significantly increases the calculated cost of providing the service.

341. Second, in terms of investment in fibre-to-the-curb (FTTC), the Commission considers that there is unlikely to be any reason that the incremental cost for deployment of fibre-based transmission capacity from the curb would match the increased charge under the UCLL Backhaul model that arises from a slightly longer distance (i.e., from the curb to the Exchange). In the first instance, the increased distance of FTTC backhaul (compared to FTTN backhaul) may not result in an increased price if 0-5 km pricing bands are used. Further, separate backhaul links are likely to be required from each curbside cabinet, meaning that instead of only one backhaul link from the FTTN cabinet (servicing 210 customers), five separate backhaul links may be required from the five separate FTTC cabinets. This increase in revenue for Telecom is unlikely to have any relationship to the costs incurred in deploying FTTC.

---

[146] Covec, *Cross-submission on Sub-loop Services consultation material,* 11 May 2009, p 5.
[147] Telecom (Chorus), *Submission on Sub-loop Services consultation material,* 4 May 2009, p 4.
[148] Vector, *Submission on the draft Sub-loop Services STD*, 15 October 2008, p 21.

Market entry

342. Telecom (Chorus) submitted that not differentiating price with respect to bandwidth and therefore the absence of small chunks of capacity at relatively low prices would impede rather than encourage entrants, and therefore be inconsistent with section 18 of the Act.[149] Also, Telecom (Group) submitted that the bandwidth required to deliver core services is significantly less than the 1 Gbps service proposed by the Commission.[150] Vodafone indicated that for core services, it would likely use at least 100Mbps.

343. Based on testing the difference between the prices using the fibre-based approach and UCLL Backhaul formula under different scenarios, Covec concluded that in many cases the UCLL Backhaul approach would lead to higher prices, and therefore lower entry.[151]

344. Vodafone and Covec reinforced this position in submissions received on 4 May 2009, emphasising that given the Sub-loop Services are to enable the delivery of higher-bandwidth telecommunications services to End Users, the Commission should focus on such services in determining the best Sub-loop Backhaul pricing model.

345. In support of this view, the Commission considers that given the higher cost of Sub-loop Services (see the relativity section) compared to the UCLL services and much smaller size of the serviceable market per cabinet (i.e., an average of 210 End Users), take-up of Sub-loop Services by an Access Seeker is likely to require provisioning of higher-value services, which are likely to require greater bandwidth per End User.

346. Differences between the two types of pricing structures may also be reduced if parties decide to provide a redundant service to their customers, where the Access Seeker purchases two fibre links with different SFPs at each end. As demonstrated in Table 4, assuming that the Access Seeker and Telecom each purchase two Sub-loop Backhaul Services, the fibre-based approach is likely to result in recurring charges that are between the 100Mbps and 200Mbps charges using the modified UCLL Backhaul approach or much less than the prices proposed by LECG (i.e., the UCLL Backhaul prices adjusted up by one standard error). Furthermore, the 1 Gbps fibre-based option also has the additional benefit of giving the Access Seekers the potential to use additional bandwidth to deliver better services to their own customers, or to provide a commercial wholesale backhaul service.

[149] Telecom (Chorus), *Submission on Sub-loop Services consultation material,* 2 March 2009, p 15.
[150] Telecom (Group), Cross-*submission on Sub-loop Services consultation material,* 2 March 2009, p 12.
[151] Covec, *Cross-submission on Sub-loop Services consultation material,* 20 March 2009, p 5.

Table 4: Comparison of backhaul recurring charges for an Access Seeker that purchases two backhaul services from an urban Distribution Cabinet that is 2.5 km from the Exchange, and has four active fibres.

Sub-loop Backhaul Services purchased per Access Seeker	**Fibre-based approach** [2 * ($1911/4 fibres + $430 for active equipment)]	**Modified UCLL Backhaul model (20 April 2009)**	**LECG proposed prices (30 October 2008)**
2 x 100Mbps	$1,816	$1,608	$2,780
2 x 200Mbps	$1,816	$2,126	$3,552
2 x 500 Mbps	$1,816	$3,078	-
2 x 1 Gbps	$1,816	$4,072	$6,552

Source: Commerce Commission, 2009

347. Furthermore, before the Sub-loop Services Conference, Telecom (Wholesale) indicated that, dependent on regulated pricing it intended to use the Sub-loop Backhaul Service to provide a commercial backhaul service from the cabinet.[152] Even if this intention does not eventuate, it demonstrates that there is potential for unused bandwidth to be sold to Access Seekers through commercial offerings. This may lessen any negative potential impact (if any) of the fibre-based pricing method on take-up of the Sub-loop Backhaul Service.

348. Given uncertainty regarding the number of fibres that would be used at a cabinet or the bandwidth requirements of Access Seekers, the Commission considers that it is difficult to draw specific conclusions in regard to which pricing model would encourage greater market entry. However, the Commission considers the fibre-based pricing model is more likely to encourage take-up of Sub-loop Services where the Access Seeker wishes to provide more bandwidth-intensive services.

New services and redundancy

349. Another important aspect of section 18 assessment is the impact on future telecommunications services in the retail space that consume more bandwidth than current mainstream services, such as web-browsing. Even if bandwidth-differentiated pricing results in a lower barrier to entry in some cases for current residential customers, such a pricing structure could make it relatively expensive for delivery of new bandwidth-intensive services to the point of preventing provision of such services.

[152] Telecom (Wholesale), *Letter responding to the Commerce Commission's request in regard to the draft Sub-loop Services STD*, 28 November, p 4.

350. Covec submitted that prices based on the UCLL Backhaul formula would make it harder for Access Seekers to introduce new bandwidth-intensive services (such as video on demand) that take advantage of the higher line speeds that the FTTN network will enable, and thereby deny End Users many of the benefits of the FTTN investment.[153] The Commission considers that there is considerable merit to Covec's submission on this point.

351. In addition to reducing a barrier to roll-out of next generation type services such as IPTV, the 1Gbps option provides an option for redundancy that better reflects the costs involved. The issue of redundancy may become increasingly important if Access Seekers use the Sub-loop Services to provide End Users with more higher-value telecommunications services.

Relativity

352. In addition to the above analysis in relation to section 18 of the Act, the Commission considers it appropriate to emphasise that the relativity requirement has not driven the proposed fibre-based pricing model.

353. Vector submitted that the Commission has continued to inappropriately apply a relativity constraint, such that the combination of the Sub-loop MPF and Backhaul price should approximate the full UCLL price.[154] The Commission discusses the importance of relativity elsewhere in this STD. However, the Commission has not used the relativity condition to determine the price for the Sub-loop Backhaul Service.

354. In its submission on the draft STD, Telecom (Group) and Telecom (Chorus) submitted that the Commission had inappropriately proposed to limit the combined price of the Sub-loop MPF and Sub-loop Backhaul rentals to the price set for the UCLL rental.[155] Telecom (Group) submitted that the Commission's new approach still retains a UCLL price cap, as the Sub-loop Backhaul price will always be linked to the UCLL price. However, the Commission has not retained a price cap. The link between the Sub-loop Backhaul price and the UCLL price reflects the fact that a significant component of the delivery of the Sub-loop Backhaul Service share common infrastructure with that part of the UCLL service that runs between the Distribution Cabinet and the Exchange, namely the trenches and ducts. Accordingly, under the fibre-based pricing model, it is possible for the combined Sub-loop MPF and Sub-loop Backhaul rentals to be greater than the UCLL rental, as is the case with the Commission's determined prices under this STD.

Decision on use of fibre-based pricing vs UCLL Backhaul model

355. In summary, the Commission has significant concerns regarding the potential for the UCLL Backhaul model to result in significant under- and over-recovery of the costs of providing the service and thereby result in outcomes that are inconsistent with section 18 of the Act. This is a result of incorporating a cost

[153] Covec, *Cross-submission on Sub-loop Services consultation material,* 20 March 2009, page 5.
[154] Vector, *Submission on Sub-loop Services consultation material,* 2 March 2009, page 3.
[155] Telecom (Group), *Submission on the draft Sub-loop Services STD*, 15 October 2009, p 5; Telecom (Chorus), *Submission on the draft Sub-loop Services STD*, 15 October 2009, p 11.

driver, in the form of bandwidth, that does not have any material impact on efficient costs for the bandwidths concerned, and the inaccuracies of the model at the shorter distances and lower bandwidths. If Telecom is unlikely to recover the efficient costs of providing the Sub-loop Backhaul Service, this would discourage further investment in deploying fibre out to Distribution Cabinets. Conversely, if prices were set that permitted Telecom to earn revenues significantly higher than the cost of providing the service, the potentially detrimental impacts to the take-up of the service would unnecessarily limit competition and be detrimental to the long-term benefits that access-based competition brings to End Users.

356. While the UCLL Backhaul pricing model may encourage market entry at lower bandwidths, the Commission does not consider that this potential benefit is sufficient to outweigh the potential downside of significant over- or under-recovery. Furthermore, the 1Gbps bandwidth would have positive impacts of the delivery of new services, especially given that such services may be required in order to justify the take-up of Sub-loop Services in light of the number of End Users served per Distribution Cabinet.

357. As noted in paragraphs 299 to 302, given information constraints, neither option available to the Commission is consistent with a natural and ordinary meaning of the IPP. However, the Commission considers that these two approaches to determining the price for the Sub-loop Backhaul Service apply a plain and ordinary interpretation of the IPP as far as is possible, given the information available.

358. As outlined above, the Commission considers that there are significant practical differences between the Sub-loop Backhaul Service and the UCLL Backhaul Service which suggest that the UCLL Backhaul pricing model is unlikely to be appropriate. Specifically, the Sub-loop Backhaul Service:

- is to be provisioned using dedicated fibre, as opposed to shared fibre;
- is typically supplied over distances of up to 5 km, as opposed to the UCLL Backhaul Service which is typically supplied over much longer distances; and
- only includes Telecom active equipment at the Exchange end of the service, whereas UCLL Backhaul includes active equipment at both ends of the service.

359. In addition, in terms of section 18 of the Act, the Commission considers that the fibre-based approach is preferable given that it is the option that is likely to best promote competition for the long-term benefit of End Users. The approach has the least risk of under- or over-recovery of costs, and better reflects the cost drivers of the Sub-loop Backhaul Service and the intention of the investment to provide for higher-bandwidth services.

360. Such an approach is likely to be more efficient, both in respect of static and dynamic efficiency. The Commission's view is that this decision is also consistent with the intention of the IPP, given the focus of the IPP on achieving

a forward-looking, cost-based efficient price for the Sub-loop Backhaul Service without the need for more sophisticated modelling required under the FPP.

361. Accordingly, the Commission's decision is that the fibre-based pricing model should be adopted to determine the pricing for provision of the Sub-loop Backhaul Service.

Selection of the preferable fibre-based model

362. On 30 January 2009, the Commission sought submissions on two variants of the fibre-based pricing model. These variants followed the same general approach of calculating the average backhaul cost per cabinet, based on the benchmarked UCLL price for trenching and Telecom's costs for fibre and active equipment, and then dividing the average cost by either the number of fibres used at that specific cabinet ('cabinet-specific' option) or the national average number of fibres used between cabinets and Exchanges across New Zealand ('national average' option).

363. Telecom (Group) and Telecom (Chorus) submitted in favour of the national average option on the basis that the cash flow certainty provided by the cabinet-specific option would disincentivise installation of cabinets where they are not profitable on a standalone basis, and that Access Seekers would be exposed to significant price volatility (as prices would vary as a party entered or exited a specific cabinet).[156]

364. In relation to price volatility, Covec responded that it is unlikely that an Access Seeker would enter a cabinet for a short period given the high costs of entry.[157] Furthermore, Covec provided summaries of a simulation exercise demonstrating that Access Seekers are likely to be able to manage price volatility at specific cabinets by spreading the risk over all the cabinets they use. It is also likely that the remaining party in a cabinet would "pick up" the leaving party's customers thereby offsetting the impact of paying higher backhaul prices.[158]

365. Orcon, Vodafone and Covec submitted in favour of the cabinet-specific option primarily on the basis that it is likely to provide lower prices at cabinets where entry is likely to occur. For example, if Telecom uses only one Sub-loop Backhaul Service in most cabinets (as indicated in submissions), the national average option would result in a national average of one backhaul service per cabinet. This would result in a backhaul price that is higher than even the current UCLL Backhaul price for 1Gbps, and would severely limit market entry of the first Access Seeker. The Commission considers that it is likely that the national average option would be the option that would least promote competition for the long-term benefit of End Users in accordance with section 18 of the Act.

366. Telecom (Group) also noted that operational issues in relation to changing prices by cabinet area would be significant.[159] While billing and pricing would be more

[156] Telecom (Group), *Submission on Sub-loop Services consultation material,* 2 March 2009, page 13-16; Telecom (Chorus), *Submission on Sub-loop Services consultation material,* 2 March 2009, page 15-16.
[157] Covec, *Cross-submission on Sub-loop Services consultation material,* 20 March 2009, p 6-7.
[158] ibid, p 7-9.
[159] Telecom (Group), *Submission on Sub-loop Services consultation material,* 2 March 2009, page 16.

complex, given that under the cabinet-specific option, Telecom would need to consider the number of backhaul services at each cabinet in order to determine the price, this is not likely to be of less importance compared to issues such as market entry and cost recovery. Furthermore, the cabinet-specific option follows the same cost allocation principles for determining the Sub-loop Co-location charges, which submitters generally agreed with in principle.

367. The Commission considers that the cabinet-specific option would best promote competition for the long-term benefit of End Users because, while still allowing Telecom to recover the determined efficient cost of the Sub-loop Backhaul Service, it is likely to provide lower prices at cabinets where entry is likely to occur and the risks associated with price volatility are likely to be manageable by Access Seekers. In addition, such an approach would best reflect the costs associated with supplying backhaul from each cabinet.

368. Furthermore, the issue of Telecom being incentivised not to build Distribution Cabinets where they would be unprofitable on a standalone basis is not limited to only the cabinet-specific option, as each of the other options involves setting a price against which Telecom can consider whether it is either cost-effective or not to install a Distribution Cabinet. For example, if the UCLL Backhaul approach were applied, Telecom's revenue from selling a 50Mbps or 100Mbps Sub-loop Backhaul Service may not cover costs of providing the service in all areas (especially rural areas) and thereby limit roll-out of Distribution Cabinets in such areas.

Specific parameters in relation to the preferred fibre-based pricing model

369. In addition to the submissions in relation to the preferred pricing methodology, the Commission has considered submissions on the specific parameters in the fibre-based pricing model.

Trenching component

370. A number of parties submitted on the proposed trenching costs, including the Commission's proposed trenching proportion of 75% of the UCLL price.

371. In response to the Covec criticism regarding the trenching proportion, the Commission considers that Covec's proposed trench proportion of 60% is likely to be too low.[160] The Commission notes that Telecom had previously submitted the following approximate breakdown of deployment costs for a fibre network (see Table 5 below).

Table 5: Telecom breakdown of fibre deployment costs

Component	Proportion
Trenching	60%-70%
Equipment (including fibre)	25%
Opex	5%

Source: Telecom, 2008[161]

[160] Covec, *Submission on Sub-loop Services consultation material,* 2 March 2009, p 1-2.
[161] Telecom, *Cross-submission on draft UCLL Backhaul STD: Appendix A*, 26 March 2008, para 42.

372. The figure that is relevant for the current purpose is the trenching proportion of a copper-based UCLL network, as it is the UCLL price to which the trenching proportion is being applied. As Covec noted, copper cable costs tend to be higher than fibre cable costs, which by itself would suggest that the 60%-70% range in Table 5 might be too high.[162] However, the Commission noted that a copper UCLL deployment would not require the kind of equipment included in a fibre network, which would have an offsetting impact on the proportions in Table 5.[163] This indicates that Covec's proposed 60%, which only takes into account the former effect, will be too low.

373. Conversely, Telecom (Chorus) submitted that the trenching proportion of 75% is too low, and should be increased to 84% based on an assessment of Telecom's fibre deployment costs.[164] However, the Commission again notes that the relevant parameter is the trench proportion of a UCLL-based network deployment. The Commission has examined Telecom (Chorus)'s assessment, using instead the cost of a 400-pair copper cable (which is typically used for the feeder cable). The resulting trench proportion is similar to the figure used by the Commission.

374. Therefore, the Commission has decided that a proportion of 75% is appropriate for estimating the trench costs associated with the UCLL feeder.

Potential double-counting of trenches

375. Covec and Vodafone submitted that the Commission has double-counted some of the trenching costs, by including the costs of new trenches in addition to the cost implicit in the feeder proportion of the UCLL service.[165]

376. The principle that the Commission has applied is that Telecom is compensated for the efficient costs of deploying the FTTN network, including the costs of using existing infrastructure, such as trenches and ducts. The Commission considers that it is appropriate to include a separate mark-up for the cost of the *new* trenches, as these are incremental costs associated with the deployment of FTTN network, and would not otherwise be incurred. This same principle was applied in setting the Sub-loop Co-location recurring charge, where Telecom's costs in deploying new Distribution Cabinets was the primary input.

377. Vector argued that the Commission's implicit trenching cost is significantly below the actual costs that Vector would incur. However, this difference could be explained by the level of trench-sharing. It appears that Vector's estimates are based on a stand-alone service, where the entire cost of the trench is allocated to a single backhaul service.[166] For example, if the feeder component

[162] The copper cable component would be proportionately higher, while the other components (including trenching) would be proportionately lower.
[163] Commerce Commission, *Sub-loop Backhaul pricing and related service description issues*, para 21.
[164] Telecom (Chorus), *Submission on Sub-loop Services consultation material,* 2 March 2009, p 35.
[165] Covec, *Submission on Sub-loop Services consultation material,* 2 March 2009, p 2; Vodafone, *Submission on Sub-loop Services consultation material,* 2 March 2009, p 1.
[166] In its cross-submission, 20 March 2009 (paragraph 25(c)), Telecom (Chorus) notes that the TSLRIC-based benchmarks used to determine the UCLL price will reflect overseas regulators' views of the appropriate level of common cost sharing rules.

of the UCLL service shares a trench with one other service, the Commission's and Vector's cost estimates converge.

Updated costs and fibre sheath length

378. On 11 May 2009, the Commission received information from Telecom (Chorus) updating a number of key inputs in the fibre-based pricing model.

379. Telecom (Chorus) indicated that the total estimated length of fibre sheath for the FTTN network was **[ ] TNZRI-CH**.[167] Telecom (Chorus) also noted that this distance may not be representative of non-FTTN cabinets across Telecom's network. However, the Commission considers that it is appropriate to use this new distance provided by Telecom (Chorus) as the vast majority of unbundled cabinets will be FTTN cabinets.

380. Telecom (Chorus) also provided updated costs in relation to trenching and fibre deployment. Compared to the information used in the 30 January 2009 consultation material, the Telecom costs for trenching have increased by 28% and the fibre-deployment costs have increased by 6%.[168] Given that these cost estimates are based on a larger dataset of cabinets, they are likely to be more accurate than the estimate used in the 30 January 2009 consultation material.

Fibre jointing costs

381. Telecom (Chorus) submitted that the Commission had omitted the costs associated with fibre jointing.[169] According to Telecom (Chorus), inclusion of jointing costs increases the Commission's estimate for total installed fibre investment from just over $165 million to $186 million.

382. However, in response to requests for further information from the Commission, Telecom (Chorus) indicated on 11 May 2009 that the fibre jointing costs were already included in information used by the Commission in the fibre-based pricing model in relation to the fibre-deployment costs.[170] In order to avoid double counting, the Commission has not included a separate mark-up for fibre jointing costs.

Active equipment costs

383. The Commission notes that the median UCLL Backhaul connection charge is the non-recurring charge set by Bell Canada for the Ethernet Transport service. The recurring charges for this service include the cost of active equipment, which supports the Telecom (Chorus) submission that such costs are typically included in the recurring charges rather than the non-recurring charges that were used in the benchmarking for the UCLL Backhaul Service.

---

[167] Telecom (Chorus), *Letter for clarifying information in relation to the Sub-loop Services STD*, 11 March 2009, p 6.
[168] The Commission notes that there was a simple adding error in the Telecom (Chorus) material supplied in relation to the total trenching costs for Distribution Cabinets in the Period 3 and Period 4 deployment. The Commission has corrected this mistake before using the updated trenching cost.
[169] Telecom (Chorus), *Submission on Sub-loop Services consultation material*, 2 March 2009, p 34.
[170] Telecom (Chorus), *Letter for clarifying information in relation to the Sub-loop Services STD*, 11 March 2009, p 7.

384. Telecom (Group) subsequently provided information on the estimated monthly equipment cost that would likely be associated with the 1 Gbps managed Ethernet service proposed by the Commission.[171] This included the capital and operating costs associated with the Alcatel Lucent 7450 Ethernet Service Switch which will be deployed at Exchanges. In addition, Telecom (Group) and Telecom (Chorus) claimed that it should be able to recover costs that it incurs to comply with obligations to provide for lawful interception capability under the Telecommunications (Interception Capability) Act 2004.

385. Covec and Vodafone considered that Telecom should not be compensated for lawful intercept costs, given that the Access Seeker can provide lawful intercept service to enforcement agencies directly.

386. The Commission understands that the Telecommunications (Interception Capability) Act 2004 requires network operators to provide lawful intercept capability for wholesale services, such as Sub-loop Backhaul. On this basis, the Commission considers that lawful intercept costs are part of providing the Sub-loop Backhaul Service, and should, therefore, be recovered via the charges for the regulated service.

387. The Commission has reviewed Telecom (Group)'s estimate of Sub-loop Backhaul equipment costs, and has decided to include these costs subject to a number of adjustments by the Commission. These proposed adjustments are discussed below.

388. The Commission noted that Telecom (Group) converted the port cost into a monthly cost, using a post-tax cost of capital of 11.3%. As noted in paragraph 488 the Commission's view is that a post-tax cost of capital of 8.7% (or 12.4% pre-tax) for new fibre and active equipment investments is more appropriate.

389. In the material released on 20 April 2009, Commission also noted that Telecom (Group) included a number of mark-ups to be added to the monthly capital cost, including a contribution to power costs, a contribution to Telecom overhead costs, and a contribution to common costs. In addition, operational costs were separately identified and included by Telecom (Group). However, the Commission considered in the consultation material of 20 April 2009 that the mark-up proposed by Telecom (Group) for Telecom (Chorus)'s overhead costs had not been justified, as a common cost contribution and operational costs had already been included.

390. Telecom (Group) submitted that the Commission should not exclude the proposed mark-up for "Chorus overhead costs" on the basis that this mark-up is the allocation used in the TSO calculation and reflects an allocation of the shared costs Telecom (Chorus) must incur to provide the service.[172] However, given that Telecom (Group) has included a specific value of operating costs relevant to the Sub-loop Backhaul active equipment, as well as a 10% common cost mark-up, the Commission has determined that a further 12% mark-up has

[171] Telecom (Group) letter to Commission, *Response to the Commission's Request for Information on Sub-loop Backhaul Equipment Costs*, 6 April 2009, and Telecom Group email to Commission dated 9 April 2009.
[172] Telecom (Group), *Submission on Sub-loop consultation material*, 4 May 2009, p 25.

not been justified, would likely result in double-recovery of these costs, and should therefore not be included in the regulated price.

391. Telecom also assumed a USD/NZD Exchange rate of 0.50. In the consultation material of 20 April 2009, the Commission considered that this exchange rate was too low, given both the current exchange rate and longer-run average exchange rates. The Commission used a USD/NZD exchange rate of 0.6, based on the 10-year average USD/NZD exchange rate of 0.593. In this final STD, the Commission has decided to use the more accurate value of 0.593.

392. As a result of the above amendments, the estimated cost of active equipment for the Sub-loop Backhaul Service is $430 per month, including the costs of lawful intercept capability.[173] The Commission has included these costs in deriving a recurring price for the Sub-loop Backhaul Service.

Operational fibre costs

393. In reviewing submissions in relation the operational costs of the Sub-loop Backhaul Service the Commission has further examined the TSO mark-up for operational costs. Rather than use a 12% mark-up for fibre-related operational costs (which is relevant to aerial cables in the TSO), the Commission considers the more relevant TSO mark-up to be the 4.3% mark-up for buried fibre optic cable.[174] This mark-up better reflects the costs incurred by Telecom than the 12% mark-up, which is noted in the TSO to be for higher maintenance aerial cables.

Combining the urban and non-urban charges

394. Telecom (Chorus) proposed that should the Commission adopt the fibre-based pricing approach, then the average backhaul cost for urban and non-urban cabinets should be combined. The rationale provided by Telecom (Chorus) for this approach was that it would be consistent with the costs that Telecom faces in practice.[175]

395. Furthermore, Vector submitted that, given lower trenching costs per metre in non-urban areas, the fibre-based pricing model leads to a supposedly perverse outcome in that the proposed charges for Sub-loop Backhaul from non-urban Distribution Cabinets was more expensive than from urban cabinets, given lower trenching costs per metre.[176]

396. The Commission notes that Telecom (Chorus) has not provided a specific reason why the non-urban and urban costs should be combined into one fibre-based price. The Commission considers that it can reasonably be expected that there be a higher non-urban Sub-loop Backhaul charge given the lower likelihood of trench sharing and the potential for longer backhaul distances in non-urban

[173] The annual cost of capital of 12.9% is converted to a monthly rate, and the asset life and time-to-build are expressed in months, in order to calculate a monthly charge for port costs.
[174] Commerce Commission, *Final Determination for TSO Instrument for Local Residential Service for period between 1 July 2003 and 30 June 2004*, 23 March 2007, Table 50.
[175] Telecom (Chorus), *Submission on Sub-loop Services consultation material*, 2 March 2009, p 17.
[176] Vector, *Submission on Sub-loop Services consultation material*, 4 May 2009, p 8-9.

areas. Furthermore, in comparing UCLL and Sub-loop UCLL rates in US states, it is clear that there is a difference between the non-urban and urban charges for the copper feeder. Accordingly, given the likelihood for costs to differ significantly between urban and non-urban links, the Commission considers that it is more reflective of costs *not* to set a combined average price for Sub-loop Backhaul from urban and non-urban Distribution Cabinets.

Risk adjustments

397. Telecom (Group) also submitted that there are two relevant sources of risk – project specific risk, and the risk of asymmetric regulatory error – and that the Commission had only allowed for the latter.

398. In terms of project-specific risks associated with investments in fibre-based backhaul, the Commission has used a WACC that includes an asset beta derived from Ofcom. Specifically, Ofcom has estimated the equity beta for British Telecom ('BT'), as well as a disaggregation of that equity beta into one for the relatively low-risk Openreach, and one for the relatively high-risk 'Rest of BT'. According to BTs "Current Cost Financial Statements for 2008 including Openreach",[177] the 'Openreach' beta applies to assets that are generally PSTN assets and passive equipment in the access network, such as Local Exchange rooms and racks, while the 'Rest of BT' beta applies to assets that are generally non-PSTN active equipment, power equipment, and fibre-related assets. This is discussed further in paragraphs 450 to 473.

399. Therefore, the Commission considers that the use of a beta for fibre-based investments, as benchmarked against the 'Rest of BT' beta, will appropriately account for systematic project-specific risks in the context of an IPP.[178]

400. The potential asymmetric risk of regulatory error arises where the detrimental effect of setting an access price too low – namely that the access provider may not invest – exceeds the detrimental effect of setting the access price too high – that the Access Seeker(s) do not take up the service. The Commission considers that such risks must be assessed on a case-by-case basis.

401. For example, in the UCLL STD, the Commission considered these arguments within the specific context of the UCLL service, in terms of the impact on investments made by Telecom as the access provider, investments by alternative network operators, and investments made by Access Seekers. In that case, the Commission noted that UCLL-based entry had led to significant innovation and investment in jurisdictions such as the UK and Australia.[179] Having taken into account the investment incentives of the access seekers and access provider of the UCLL Service, the Commission concluded that the median price would best promote competition and efficiencies for the long-term benefit of End Users.

---

[177] http://www.btplc.com/Thegroup/RegulatoryandPublicaffairs/Financialstatements/2008/Currentcostfinancialstatements2008.pdf

[178] For reasons given in paragraphs 132 to 143, the Commission does not consider that a real options surcharge is appropriate for the current determination.

[179] Commerce Commission, *Decision No. 609: Standard terms determination for the designated service Telecom's unbundled copper local loop network*, *7 November 2007*, paras 208-213.

402. In the case of the Sub-loop Backhaul Service, the bulk of the new investment relevant to the service is currently being undertaken by Telecom. While it is largely using existing ducts and thereby avoiding major new investment in trenches, the Commission has estimated new fibre investment in the vicinity of $114 million.[180] By comparison, the investment in cabinet-based equipment made by other Access Seekers is likely to be relatively small. Given the potential for regulatory error associated with using the benchmarked trenching costs and the potential for asymmetric outcomes from setting an incorrect price, in the current case the Commission considers that a move above the median benchmark is justified. The Commission has taken the 75th percentile observation of the feeder proportion of the UCLL price.

403. Therefore, the Commission considers that the relevant sources of risk have been adequately taken into account in this determination. This is discussed further in paragraphs 490 to 502 in relation to the cost of capital.

<u>Dividing the average cost by fibres or services</u>

404. Telecom (Chorus) submitted that if the Commission implements the fibre-based approach, then the average backhaul cost should be divided by the number of backhaul services rather than active fibres. The rational for this amendment was that an Ethernet backhaul service may require a single fibre or a fibre pair, depending on equipment and distances, and that it is critical that the price attaches to the service definition.

405. The Commission considers that the primary cost driver for the Sub-loop Backhaul Service is the number of active fibres used between the cabinet and the Exchange. On that basis it would be more efficient, and therefore better in line with section 18, to price the service according the number of active fibres. Such a decision would encourage parties to make efficient choices when selecting transmission options, such as choosing between a double-fibre SFP and a more expensive single-fibre SFP.

406. Another advantage of the fibre-based approach is that it enables backhaul costs to be shared between other services that use the fibre link between the Distribution Cabinet and Exchange. Using a fibre-based price would mean that if Telecom deploys fibre-based transmission services from its cabinets that are not the regulated service, then Sub-loop Backhaul charges would still reflect the number of active fibres used between the Distribution Cabinet and Exchange. This would not occur if the Commission did not base the Sub-loop Backhaul recurring charges on the number of fibres used.

407. Furthermore, this approach is similar to that taken for the Sub-loop Co-location core recurring charge where the average cabinet costs are apportioned to Access Seekers according to the proportion of occupied space required for their equipment. Submitting parties were generally comfortable with this approach in relation to the cabinet costs.

[180] As noted in paragraph 254, in the Commission's consultation of 30 January 2009, the Commission initially estimated Telecom's new fibre investment to be around $165 million. However, in light of updated cost and fibre sheath length information received from Telecom since that consultation, the Commission has revised its initial estimate down to approximately $114 million.

Recurring charge

408. Table 6 summarises the Commission's determination of a recurring charge for the Sub-loop Backhaul Service.

Table 6: Sub-loop Backhaul Recurring Charge (average cost per cabinet)

	Urban	**Non-Urban**
Trenching costs (existing) per month*	$1,519	$2,805
Fibre costs per month**	$392	$392
Average passive costs per month***	$1,911	$3,197
Average active equipment cost per month	$430	$430

* Based on feeder proportion of UCLL price of 48.6%; trenching proportion 75%; and 210 lines per cabinet.

** Using 12.4% pre-tax cost of capital; 20 years; 3,608 cabinets; and mark-ups of 4.3% (opex) and 10% (common costs)

*** To be allocated according to the number of fibres used

409. The combined result of the above decisions is that the Commission has determined that the recurring charge for the Sub-loop Backhaul Service is based on the fibre-based pricing model, with the average backhaul costs of $1,911 per month for an urban cabinet and $3,197 per month for a non-urban cabinet being divided between the number of active fibres at any specific cabinet. To the fibre-based charge the Commission has determined that a charge of $430 will be added to each instance of the Sub-loop Service, to account for active equipment being supplied at the Exchange end of the service.

410. The monthly recurring charge for a 1 Gbps Sub-loop Backhaul Service is to be calculated on a case-by-case basis according to the following formula:

$$A = B \times \left(\frac{C}{D} \right) + E$$

Where: A = the monthly charge paid by the Access Seeker
B = monthly passive equipment costs for an Urban Distribution Cabinet ($1,911 per month) or monthly passive equipment costs for a Non-urban Distribution Cabinet ($3,197 per month)[181]
C = the number of fibres provided to the Access Seeker between the Distribution Cabinet and Local Exchange in respect of the Sub-loop Backhaul Service
D = the total number of fibres used between the Distribution Cabinet and Local Exchange
E = monthly active equipment costs ($430 per month)

[181] "Urban" and "Non-urban" Distribution Cabinets are as defined in the Sub-loop UCLL Price List.

Non-Recurring Charges

Sub-loop Backhaul Service New Connection

411. Under the draft Sub-loop Services STD, the Commission set the charge for a Sub-loop Backhaul Service New Connection at "zero" as it was considered that the relevant costs would be recovered through the POA charge for either the Sub-loop Backhaul Connection installation or the Sub-loop Handover Fibre installation.

412. At the Sub-loop Services Conference, there was discussion on whether the $4,030 connection fee at each end of the UCLL Backhaul Service should be applicable to the Sub-loop Backhaul Service where active Telecom equipment is only supplied at one end and not two.[182] Telecom (Chorus) indicated that the entire $4,030 charge may not be applicable where there is no active Telecom equipment and agreed to provide information on the cost of connection at the cabinet end of the service.[183]

413. In correspondence dated 19 December, Telecom (Chorus) recommended that the UCLL Backhaul connection charge be used for the connection charge at the Exchange end of the Sub-loop Backhaul Service and a new connection charge at the Distribution Cabinet. Telecom (Chorus) estimated that the cost of this work would be on average $1,068.42.[184] This is based on an assumption that on average 2 fibre joints are required. However, Telecom (Chorus) subsequently stated in correspondence dated 14 January 2009 that their estimate of two joints per Distribution Cabinet is "light" and that they would estimate an average of three to four joints for Sub-loop Backhaul.[185]

414. In material released on 30 January 2009, the Commission proposed that the new connection charge of $1,068 at the cabinet end of the service (based on costs supplied by Telecom), and $4,030 at the Exchange end of the service (based on the UCLL Backhaul benchmarked cost).

415. In response to the consultation material released on 30 January 2009, Vodafone submitted that the only work required for backhaul connection at the cabinet end is plugging the fibre into the Access Seeker's DSLAM, and that $1,000 seemed excessive for that one end.[186] Orcon submitted that connection charge is in the region of a commercial managed Ethernet service, and they would expect this charge to be significantly lower to install a dedicated fibre connection.[187]

416. On 11 May 2009 Telecom (Chorus) provided updated cost information in relation to their FTTN roll-out. In that correspondence, Telecom (Chorus) acknowledged that fibre jointing costs were already included in the

---

[182] Sub-loop Services Conference, *Transcript*, 9 December 2008, p 259-256.
[183] Sub-loop Services Conference, *Transcript*, 9 December 2008, p 264-265.
[184] Telecom (Chorus), *Sub-loop Service STD Post-Conference Information Request*, 19 December 2008, Appendix 4.
[185] Telecom (Chorus), *Subsequent material received (14 Jan 2009) from Telecom (Chorus) in relation to information requests made at the Sub-loop Conference*, 14 January 2009, p 1.
[186] Vodafone, *Submission on Sub-loop consultation material*, 2 March 2009, p 3.
[187] Orcon, *Submission on Sub-loop consultation material*, 2 March 2009, p 1.

Commission's calculation of the recurring charge set under the fibre-based pricing model.[188] This information also indicated that some fibre-related costs in relation to the ends of the service were included in the Distribution Cabinet costs.

417. The Commission has determined that there should be a $4,030 connection charge at the Exchange end of the Sub-loop Backhaul Service and a different charge at the Distribution Cabinet end of the service. The Commission has determined that the appropriate charge at the cabinet end of the service is for one joint given that costs of other joints in the fibre network are recovered via the recurring Sub-loop Backhaul charge. The charge is therefore $541 (including pig-tail connectors, front office costs, administration costs and common costs).[189]

Other core charges

Sub-loop Backhaul Relinquishment

418. As in the UCLL Backhaul STD, under the draft Sub-loop Services STD the Commission separated the charges for relinquishment into a core charge (set at 'no charge') for relinquishment of the Sub-loop Backhaul Service and a POA sundry charge for relinquishment of the Sub-loop Backhaul Connection or Sub-loop Handover Fibre.

419. No specific submissions were received that challenged the preliminary view set out in the draft STD. Accordingly, the Commission has determined that there should be no charge for relinquishment of the service.

Sub-loop Backhaul Connection space rental charge

420. Under the draft Sub-loop Services STD the Commission considered that the space rental for the Sub-loop Backhaul Connection in the Distribution Cabinet should be set at no charge, given that the full costs of the cabinets are to be recovered through recurring Sub-loop Co-location charges for power and space.

421. The Sub-loop Backhaul Connection space rental at the Exchange was set at the same amount ($27.09 per month) as for the UCLL Backhaul Connection space rental in the UCLL Backhaul STD, given that both these charges are for similar space in the Exchange.

422. Telecom (Chorus) raised specific concern with the Commission's proposal in the draft STD that no charge should be payable for the space rental for cables that are within the Distribution Cabinet. However, for the reasons set out in paragraph 215 to 217 the Commission has determined that no charge should be applicable in relation to the space rental for Sub-loop Backhaul tie cables that are within the Distribution Cabinet.

---

[188] Telecom (Chorus), *Letter to the Commission regarding information requested at the Sub-loop Services Conference*, 19 December 2009, p 8.

[189] The connection charge at each end of the service does not vary depending on the number of fibres purchased by the Access Seeker.

Sub-loop Handover Fibre space rental charge

423. Under the draft Sub-loop Services STD the Commission considered that the space rental for the Sub-loop Handover Fibre at the Distribution Cabinet should be set at the same amount as the Sub-loop UCLL Tie Cable space rental ($6.66 per month).

424. The Sub-loop Handover Fibre space rental at the Local Exchange was been set at the same amount ($27.09 per month) as for the Handover Fibre space rental in the UCLL Backhaul STD, given the similarity between these services.

425. No specific submissions were received that challenged the preliminary view set out in the draft STD in relation to these charge. Accordingly, the Commission has retained the charges as proposed in the draft STD.

PRICE TERMS – SUB-LOOP COST OF CAPITAL FOR IPP

Introduction

426. In determining a price for the Sub-loop Co-location Service and the Sub-loop Backhaul Service, the Commission has used information provided by Telecom (Chorus) on the upfront investment in deploying Distribution Cabinets and fibre from the Exchange out to those cabinets. These investments are converted into recurring monthly rental charges, which requires the use of a cost of capital figure.

427. This section sets out the Commission's approach to determining the appropriate cost of capital for the Distribution Cabinets and the backhaul from those cabinets within the context of the IPP for the Sub-loop Services.

Draft STD

428. In the draft STD, the Commission used a pre-tax 10% cost of capital to annualise Distribution Cabinet capital costs. The 10% figure was based on the cost of capital figure used by the Commission for Exchange-based co-location, which was sourced from the cost of capital determined by Ofcom in respect of BT's access network.[190] The draft STD considered that cabinet co-location is sufficiently similar in terms of risks as Exchange-based co-location, as both co-location services relate to the facilities (such as racks and shells) for housing active equipment.

429. Telecom (Group) and Telecom (Chorus) submitted that a post-tax cost of capital of 11.3% should be used for cabinets, and that this is probably a lower bound. Other parties noted that the cabinets are relatively low risk investment, and that the proposed recovery of cabinet costs across rack units occupied will reduce the risks faced by Telecom in providing the Sub-loop Co-location Service.

430. The Commission notes that Telecom (Chorus)'s proposed 11.3% cost of capital is a post-tax figure, which includes a CAPM-derived cost of capital of 9.3%, and a 2% margin to account for "opportunity costs" and the risk of asset stranding.[191] On a pre-tax basis, the proposed cost of capital is 16.1%.[192] This compares with the pre-tax 10% that was used in the draft STD.

431. The Commission has a number of concerns with Telecom (Chorus)'s proposed use of a post-tax cost of capital of 11.3% for cabinets. First, the CAPM component of 9.3% appears to be relatively high for an investment in cabinets. Telecom claimed that the 9.3% cost of capital is the average post-tax return that Telecom Group requires Telecom (Chorus) to earn across its business. However, according to the PricewaterhouseCoopers ('PwC') Cost of Capital Report,[193] PwC estimated the weighted average cost of capital (WACC) for Telecom *as a whole* to be 9.3%. As Telecom (Chorus) is responsible for access

[190] Commerce Commission, *Decision No. 610: Standard Terms Determination for the designated service Telecom's unbundled copper local loop network co-location*, 7 November 2007, paragraph 65.
[191] Sub-loop Services Conference, *Transcript*, 9 December 2008, page 245.
[192] Based on a corporate tax rate of 30%.
[193] PwC, The Cost of Capital Report, as at 30 September 2008.

services, which are generally regarded as being of relatively low risk,[194] the Commission considers that a 9.3% post-tax WACC for all of Telecom may be regarded as being an upper bound for Telecom (Chorus).

20 April 2009 Consultation

432. The Commission has, however, reconsidered the use of a benchmarked 10% pre-tax cost of capital. There may be a number of reasons why a benchmarked cost of capital from another country may not reflect the cost of capital in New Zealand. In particular, a number of components of the cost of capital are likely to be country-specific, such as the risk-free interest rate and the market risk premium. While this issue may be minimised where the Commission has a number of benchmarks available to it, this is not the case in relation to the Sub-loop Services (where only one is available). In order to mitigate the risks associated with using one benchmark, the Commission sought to adjust the more country-specific parameters of the cost of capital calculated by Ofcom.

433. Furthermore, the need has also arisen for the Commission to consider an appropriate cost of capital for the Sub-loop Backhaul Service, given the amended approach to setting a regulated price for that service.

434. In light of these points, the Commission undertook further consultation on the appropriate cost of capital for both Distribution Cabinets and components of the Sub-loop Backhaul Service.[195]

435. In consultation material released on 20 April 2009, the Commission proposed an approach to establishing the cost of capital for determining charges in the Sub-loop Co-location and Backhaul Services in a manner that reflects the intent of the IPP set out in the Act. Accordingly, the Commission proposed following an approach taken by Ofcom on key inputs (such as the asset beta), but taking into account, where possible, country-specific factors.

436. The Commission specifically proposed using BT's two different asset betas for co-location space and fibre assets (as set out in BT's regulatory accounts), and Ofcom's approach to setting the risk-free rate (but with New Zealand bond rate data). Other factors included the use of a market risk premium, gearing and corporate tax rate that are relevant to the circumstances under consideration in this STD.

437. A summary of the Commission's proposed approach in the 20 April consultation is set out in Table 7.

[194] For example, in its final statement on a pricing framework for Openreach (BT's access unit), Ofcom stated its view that Openreach's beta is below that of BT Group. Ofcom, *A New Pricing Framework for Openreach – Statement*, 22 May 2009, paragraph A8.72.

[195] Commerce Commission, *Cost of Capital Estimates for Distribution Cabinets and Fibre-based Backhaul – Further Consultation*, 20 April 2009.

Table 7: Commission's proposed cost of capital for Sub-loop Services

	Cabinet Estimate	Fibre Estimate	Source
Risk-free Rate	5.5%	5.5%	NZ 5-year bond rate (same process followed as Ofcom)
Market Risk Premium	7.0%	7.0%	TSO
Equity Beta	0.743	0.929	Ofcom
Asset Beta	0.52	0.65	Based on Ofcom (Openreach and 'Rest of BT')
Debt Premium	3.0%	3.0%	Upper bound of range used by Ofcom (2-3%)
Gearing	30%	30%	TSO
Corporate Tax Rate	30%	30%	TSO
Investor Tax Rate	30%	30%	TSO
Post-Tax WACC	**8.1%**	**9.0%**	
Pre-Tax WACC	**11.6%**	**12.9%**	

438. A summary of submissions on the Commission's proposed cost of capital is set out in Appendix B.

439. Following receipt of the submissions, the Commission engaged Dr Martin Lally to provide an expert review of the submissions received on the Commission's proposed approach. Dr Lally's review did not raise any significant issues that are relevant in an IPP context.[196]

Commission view on cost of capital for cabinets and fibre

440. Having considered the views set out in submissions, the Commission has derived the following cost of capital estimates which are used to determine prices for two of the core sub-loop services, namely the co-location charge applying to the distribution cabinets, and the fibre component of the recurring charge for the Sub-loop Backhaul Service.

441. The Commission has determined these cost of capital estimates by benchmarking components of Ofcom's cost of capital for Openreach and the Rest of BT, taking into account country-specific differences between the UK and New Zealand. The Commission considers that this approach results in reasonable cost of capital values that reflect the systematic risks faced by Telecom in supplying the Sub-loop Co-location and Sub-loop Backhaul Services in New Zealand, while also taking account of New Zealand-specific factors such as the cost of debt, tax rates, and the market risk premium.

442. The Commission's decision on the relevant cost of capital parameters to be used in this determination is set out below.

[196] Dr Martin Lally did raise an issue which generally had not been submitted on by the parties, regarding the use of a pre-tax/post-tax WACC. However, the Commission has continued to use a pre-tax WACC under the IPP, on the basis that the Ofcom benchmarks used in this STD are expressed on a pre-tax basis. The Commission considers that this may be a relevant consideration in an FPP context.

Risk-free rate

443. In the 20 April consultation, the Commission proposed using a risk-free rate of 5.5%. This was based on the use of a 5-year government bond rate, averaged over various periods up to the end of March 2009. The Commission excluded the spot rate and the 3-month average, due to concerns over the use of short averaging during periods of volatility). The Commission also considered the use of government bonds with a 2-year maturity, on the basis that a shorter regulatory review period may be appropriate, but found this to have little impact on the resulting risk-free rate.

444. PwC accepted the Commission's proposed approach as being reasonable.

445. In light of submissions, the Commission has followed the same approach as set out in the 20 April consultation, using updated bond rates.[197] The resulting rates on 2-year and 5-year bonds are summarised in Table 8.

Table 8: 2-Year and 5-Year Government Bond Rates

Averaging Period[198]	**2-Year Bond Rate**	**5-Year Bond Rate**
Spot (21 May 2009)	3.7%	4.5%
3-month average	3.6%	4.3%
6-month average	3.9%	4.3%
1-year average	5.0%	5.2%
2-year average	6.1%	6.1%
3-year average	6.3%	6.2%
5-year average	6.3%	6.2%
range considered	3.9%-6.3%	4.3%-6.2%
mid-point	5.10%	5.25%

Source: Commerce Commission, 2009[199]

446. The average of the 2-year bond midpoint (5.10%) and the 5-year bond midpoint (5.25%) is 5.18%.

447. The Commission has also considered the use of 1-month averages of government bonds with a 2-year and 5-year maturity. The Commission notes that Telecom's cabinetisation programme is rolling out distribution cabinets and fibre out to those cabinets, over a period of time, and that a single 'snapshot' of 1-month average bond yields may not reflect this deployment. The Commission has therefore estimated the average bond rates for 2-year and 5-year government bonds, as of the commencement of the STD process, and around the date of this STD. These rates are summarised in Table 9.

[197] As of 21 May 2009.
[198] These averaging periods correspond to those considered by Ofcom.
[199] Commission analysis of Reserve Bank bond rates.

Table 9: 2-Year and 5-Year Government Bond Rates
(November 2007 and May 2009)

Averaging Period	**2-Year Bond Rate**	**5-Year Bond Rate**
1-month (to 30 November 2007)	7.5%	7.2%
1-month (to 21 May 2009)	3.6%	4.4%

Source: Commerce Commission, 2009[200]

448. The average of the bond rates set out in Table 9 is 5.7%. While the 5.7% average is higher than the 5.18% calculated above, the Commission notes that Telecom's deployment of distribution cabinets has progressively ramped up over the latter part of the last 18 months. This suggests that the 5.7% average is likely to overstate the appropriate risk-free rate for this determination.

449. Given the Commission is setting the regulated price in accordance with the IPP, the Commission has maintained the approach taken by Ofcom. Accordingly, the Commission considers that a risk-free rate of 5.18% is appropriate for determining the cost of capital in respect of the Sub-loop Co-location and Sub-loop Backhaul Services.

Asset beta

450. In the 20 April consultation, the Commission proposed using the asset betas that had been derived by Ofcom by splitting the BT Group beta into constituent betas for Openreach and the "Rest of BT".

451. Telecom submitted that the Ofcom estimates of the betas for Openreach and Rest of BT are not appropriate benchmarks for Telecom's investments in cabinets and fibre-based backhaul. In particular, the mix of assets is likely to differ such that the Openreach and Rest of BT betas are unlikely to be comparable benchmarks for distribution cabinets and fibre backhaul.

452. PwC also argued that while the Ofcom methodology may be appropriate, the actual betas estimated by Ofcom appear to be too low for New Zealand. PwC noted that the BT beta of 0.59, which is disaggregated by Ofcom, is lower than the Telecom beta of 0.72. PwC recommended that the Ofcom equity beta differentials (+/- 0.1) be applied to the Telecom equity beta of 1.04, which results in an asset beta for cabinets of 0.65 (compared to the Commission's proposed 0.52), and an asset beta for fibre backhaul of 0.79 (compared to the Commission's proposed 0.65).

453. While the asset bases within Openreach and the "Rest of BT" include a range of asset types, the Commission's view is that for a benchmarking exercise under the IPP, they represent reasonable comparators for the cabinet and fibre backhaul investments being considered in this determination. The reason the Commission proposed to benchmark against the Openreach and "Rest of BT"

[200] Commission analysis of Reserve Bank bond rates.

betas is that Openreach is the access unit resulting from a similar form of separation to that which has led to the establishment of Chorus.

454. In addition, as noted in the 20 April consultation, the Openreach assets are generally PSTN assets and passive equipment in the access network, including local exchange rooms and racks. The "Rest of BT" assets tend to be active equipment, power equipment, and fibre-related assets.

455. The Commission remains of the view that the asset mixes of Openreach and the "Rest of BT" are sufficiently similar to the cabinet and fibre backhaul services respectively for the purposes of using them as benchmarks in the STD.

456. In the 20 April consultation, the Commission used the Ofcom equity beta estimate of 1.0 and Ofcom's assumption of a 35% gearing level, and derived an asset beta for BT of 0.59.[201] As noted by PwC, the correct approach to de-levering an equity beta is to use an average gearing level for the same period over which the equity beta is estimated.

457. The Commission notes that the equity beta that had been proposed by Ofcom was based on equity beta estimates by the Brattle Group,[202] over periods of 1, 2 and 5 years. Table 10 summarises these equity beta estimates, along with the gearing levels corresponding to each period, and the implied asset betas.

Table 10: Brattle Group equity beta and gearing estimates

	BT equity beta*	BT gearing**	BT asset beta#
1 year	0.94	38%	0.58
2 year	0.93	34%	0.61
5 year	0.88	31%	0.60

Notes: * Brattle Group (2008), Table 1
** averages sourced from Brattle Group (2008), Table 3. As no historic gearing is given for 2004, the Commission has used the 2005 figure of 32%.
# derived from the equity betas and gearing

458. The 5-year asset beta for BT was 0.60, which is slightly higher than the 0.59 previously estimated by the Commission.

459. Ofcom has since finalised its beta estimates for BT, based on updated advice from Brattle. The equity beta estimates and average gearing levels from Brattle's updated advice, along with the implied asset betas, are summarised in Table 11.

Table 11: Brattle Group equity beta and gearing estimates

	BT equity beta*	BT gearing**	BT asset beta#
1 year	0.85	50%	0.43
2 year	0.85	44%	0.48

[201] Given an equity beta βe and gearing L, the asset beta βa is derived as follows: βa = βe / (1+L/(1-L)).
[202] See http://www.ofcom.org.uk/consult/condocs/openreachframework/reports/equity.pdf.

5 year	0.84	35%	0.55

Notes: * Brattle Group (2009), Table 1
** averages sourced from Brattle Group (2009), Table 3.
# derived from the equity betas and gearing

460. The 5-year asset beta for BT is 0.55. The reduction from 0.60 to 0.55 appears to have resulted from Brattle's lower estimate for BT's equity beta (with the 5-year estimate declining from 0.88 to 0.84), as well as a recent increase in the level of gearing.

461. As noted by PwC, the asset beta for BT is lower than the asset beta of 0.72 for Telecom.[203] However, the Commission considers that this is likely to be due to Telecom owning a mobile business, whereas BT does not. Betas for mobile businesses tend to be relatively high.

462. For example, in its 2007 report to the ACCC on mobile termination, WIK-Consult reported the beta estimates for a number of mobile network operators.[204] These beta estimates are summarised in Table 12. WIK-Consult concluded that an average asset beta estimate for mobile operators of 1.18 is appropriate.[205]

Table 12: Mobile betas

MOBILE	estimated equity beta	gearing	implied asset beta
Cosmote Mobile	0.51	5.3%	0.49
Mobistar	1.35	5.6%	1.30
O2	1.81	7.5%	1.68
Telefonica Moviles	1.31	22.3%	1.11
Vodafone	1.31	13.4%	1.13
Average	1.26	10.8%	1.14
average (excl outliers)	1.32	13.8%	1.18

Source: WIK-Consult, January 2007, page 33.

463. Given an asset beta for its mobile business of 1.1-1.2, the Commission considers that an asset beta of 0.55 for its fixed-line business (based on BT's updated beta) is likely to be approximately consistent with PwC's estimate of 0.72 for Telecom as a whole.[206]

464. The Commission therefore considers that while Telecom's asset beta is higher than BT's asset beta, the BT estimate (0.55) is likely to be a reasonable benchmark for Telecom's fixed-line business.

[203] In the 20 April consultation, the Commission referred to the Telecom asset beta as being 0.60. However, the Commission had used a gearing level of 42%, which PwC has pointed out applied only to the end of the 5-year period over which the Telecom equity beta was estimated. If average gearing over the 5-year period is used (31%), the resulting asset beta for Telecom is 0.72.
[204] WIK-Consult, *Mobile Termination Cost Model for Australia*, January 2007, page 33.
[205] WIK-Consult excluded the two outlier values of 0.49 for Cosmote Mobile and 1.68 for O2.
[206] Given a mobile beta of 1.18 and a fixed beta of 0.55, such a reconciliation would involve Telecom's mobile business accounting for just over 25% of the value of Telecom as a whole.

465. The Commission has therefore estimated an asset beta for Telecom's cabinets by benchmarking against the Ofcom estimate for Openreach. Using Ofcom's updated estimate of the equity beta for Openreach of 0.76, and average gearing of 35%, the resulting asset beta for Openreach is 0.49. Similarly, the "Rest of BT" equity beta is equivalent to an asset beta of 0.62.

466. In commenting on the approach proposed by the Commission, Covec submitted that while it supports the Commission's overall approach to the cost of capital, it considers that the Commission had over-estimated the betas. Covec argued that Telecom (Chorus) faces a relatively low risk in respect of its investment in cabinets and fibre-based backhaul between the cabinets and exchanges, due to the guaranteed recovery of its costs as a result of the commitment by Telecom (Wholesale) to enter each cabinet and utilise the backhaul service. As a result, Covec recommended that the betas be reduced relative to those estimated by Ofcom, and proposed 0.4550 for cabinets and 0.4225 for backhaul.

467. In its cross-submission, Covec submitted that:[207]

> The assets Chorus is building are in the nature of infrastructure that will be used to provide basic services. It might therefore be appropriate to compare the asset beta with those sectors covered by PWC that also supply basic services.

468. Covec summarised the betas for 18 firms in the agriculture, ports, property, and electricity distribution sectors. Covec noted that the median asset beta is 0.33, and concluded that this suggests the Commission's estimates are generous.

469. In proposing asset betas of 0.4550 and 0.4225 for cabinets and backhaul, respectively, Covec does not substantiate how these estimates were derived. The Commission also notes that while Telecom (Chorus) would be able to recover its cabinet and backhaul costs as long as Telecom (Wholesale) or at least one access seeker is present, Telecom as an entity nevertheless does retain some of the risk of such investments.

470. The Commission has considered Covec's proposed comparison with asset betas from basic infrastructure sectors as a potential cross-check on the Commission's results. This indicates that the risks faced by Telecom (Chorus) may be lower than for Telecom as a whole.

471. However, on Covec's justification for its proposed comparators – that these companies provide "basic services" – the Commission considers it questionable as to whether these betas are sufficiently comparable to the provision of cabinet and backhaul services. In the Commission's view, the betas derived from Openreach and the "Rest of BT" are likely to be better benchmarks, given the similarity of the operations of these groups to the services under consideration in this determination. In other words, the Openreach and "Rest of BT" betas are likely to be more comparable for a benchmarking exercise under the IPP, than the betas proposed by Covec.

472. The Commission's view is that the use of the asset betas for Openreach and the "Rest of BT" is a reasonable basis for establishing the asset betas applicable to

[207] Covec, *Cross-Submission on Sub-loop Services: Further Consultation*, 11 May 2009, paragraph 61.

the cabinet and backhaul services under consideration. This takes into account the observation that the overseas benchmarks in the UK – where there is a similar form of operational separation of BT's access unit – tend to regard the access operation as being relatively low risk, and the other operations as being relatively high risk. While there may be some differences in the risks faced by the respective operations (for example, as a result of the way in which Telecom (Chorus) costs are recovered), the Commission is satisfied that they are sufficiently comparable under an IPP to provide reasonable benchmarks in this determination.

473. The Commission has used an asset beta of 0.49 for the Sub-loop Co-location Service and an asset beta of 0.62 for the Sub-loop Backhaul Service.

Debt premium

474. The Commission had proposed a debt premium of 3.0%, based on the 2%-3% range allowed by Ofcom, and on the 2.7% used by the Commission in the Vector gas authorisation.

475. In response, PwC submitted that a debt premium of 3% may be insufficient given current financial conditions, although further analysis would be required to establish a more robust estimate. However, PwC failed to provide any specific evidence that 3% is too low.

476. Ofcom has subsequently released its final statement regarding the pricing framework for Openreach. Ofcom adopted a debt premium of 3% in that final statement.[208] Accordingly, the Commission has retained the debt premium of 3% that was proposed in the 20 April 2009 consultation paper.

477. As a cross-check, the Commission has examined the current premium on Telecom's debt, based on indicative valuations provided by ABN AMRO Craigs as of May 2009. Such valuations were available for two classes of Telecom bonds. Table 13 shows the yields on these bonds in May 2009 and two earlier months, along with risk-free rates for the matching terms.

Table 13: Debt margins for Telecom bonds

	10 March 2009			9 April 2009			11 May 2009		
	yield	R_f	premium	yield	R_f	premium	yield	R_f	premium
TCN480	6.02	3.65	2.37	7.12	4.30	2.82	6.62	4.32	2.30
TCN490	7.02	4.22	2.80	7.72	4.89	2.83	7.42	5.07	2.35

Source: Dr Lally, 2009

478. The resulting debt premiums range from 2.30% to 2.83%, with a median value of 2.58%. This indicates a debt premium for Telecom of approximately 2.60%.

479. The estimated debt premium of 2.60% reflects the fact that the above Telecom bonds mature in four and seven years, with an average of 5.5 years. While this

[208] Ofcom, *A New Pricing Framework for Openreach – Statement*, 22 May 2009, paragraph 4.25, table 4.4.

is consistent with the Commission's use of a 5-year bond, the use of a 2-year bond would require some adjustment. In lowering the debt term from an average of 5.5 years to an average of 3.5 years, the Commission has estimated that the debt premium would fall by around 0.10%, to 2.50%.

480. The Commission considers that it would be appropriate to allow a margin of 0.30% for debt issuance costs under this approach.

481. Accordingly, the resulting debt premium would be 2.8%. As noted above, the Commission has used this as a cross-check against the benchmarked debt premium of 3%. This cross-check suggests that the Commission's benchmark of 3% is reasonable, and contrary to PwC's submission, is unlikely to be too low.

Gearing

482. The Commission had proposed a gearing level of 30%, based on the level of gearing used in the TSO determinations.

483. PwC and Covec submitted that a gearing level of 35% was appropriate. According to PwC, the decline in the market value of equity over the last two years would have increased the relative value of debt.

484. Telecom's gearing has fluctuated over the past year, within a range of 30% to 40%. According to PwC, Telecom's gearing at the end of December 2008 was 43%, although PwC's estimate of Telecom's average gearing over the 5 years to December 2008 is 31%. This indicates that the level of gearing has been increasing.

485. The Commission considers it reasonable to increase the gearing level to 35% in light of recent declines in equity values.[209] This figure is also consistent with the gearing assumption applied by Ofcom.

Market Risk Premium

486. PwC submitted that the Commission's estimate of 7.0% for the market risk premium is too low. PwC referred to its previous submissions on behalf of Telecom, that the market risk premium should be 7.5%. Vector also submitted that 7.0% was too low, given current financial conditions.

487. The Commission has maintained the use of a market risk premium of 7.0%, which is consistent with other Commission decisions that were specific to the New Zealand context.

[209] For example, the Commission notes Dr Lally's reference to movements in Telecom's debt and equity values over the last 12 months. As of June 2008, Telecom's book debt was $2.79 billion; by December 2008, this had increased to $2.95 billion. Over the same period, Telecom's equity value declined from $6.59 billion (1.826 billion shares at $3.61 per share), to $4.97 billion (1.828 billion shares, $2.39 per share). Telecom's gearing increased from 30% to 40% over this period, but has since dropped back to 37% in May 2009.

Conclusion on Cost of Capital for Distribution Cabinets and Sub-loop Backhaul

488. Table 14 summarises the cost of capital estimates used by the Commission in this determination.

Table 14: Summary of Cabinet and Sub-loop Backhaul WACCs

	Cabinets	Backhaul
Risk-free rate	5.18%	5.18%
Market Risk Premium	7.00%	7.00%
Equity beta	0.75	0.95
Asset beta	0.49	0.62
Debt premium	3.0%	3.0%
Gearing	35%	35%
Corporate tax rate	30%	30%
Investor tax rate	30%	30%
Post-tax WACC	**7.8%**	**8.7%**
Pre-tax WACC	**11.1%**	**12.4%**

489. The Commission notes that it has used a pre-tax cost of capital in this STD, which is derived by grossing up the post-tax WACC using the statutory tax rate of 30%. The use of a pre-tax cost of capital is consistent with the benchmarked Ofcom estimates, which are generally expressed in pre-tax terms. The Commission therefore considers that the use of a pre-tax cost of capital is appropriate in applying the IPP. However, to the extent that Telecom's effective tax rate is less than the statutory rate, this will result in a revenue stream that will overcompensate Telecom (Chorus).

Risk adjustments

490. Telecom (Group) submitted that a number of further adjustments are required, in order to take account of risks that are not captured within the capital asset pricing model (CAPM) used above. According to Telecom (Group), these include:

- uncertainty around regulatory outcomes;
- uncertainty around the variance between the expected economic life of an asset and the actual economic life; and
- uncertainty around the rate of technological change.

491. In addition, Telecom (Group) submitted that the value of real options extinguished through investment commitments should be allowed for; that the capping of returns through a regulated WACC should be recognised; and that the effect of the global financial crisis on government bond rates, debt premiums, market risk premiums, and betas should also be taken into account.

492. In terms of the significance of regulatory risk, Telecom (Group) provided little explanation of this, or how it might be accounted for. Telecom (Group) does raise the risk of asymmetric outcomes earlier in its submission, although the Commission considers that it has given sufficient weight to this through the use of a relatively high benchmarked feeder proportion when determining the price for the Sub-loop Backhaul Service. While the Commission accepts that such an adjustment may be imprecise, the Commission considers that this is reasonable in the current case given the likely relative investments by the access provider and Access Seekers.

493. In addition, the Commission notes that for a number of WACC inputs, the application of the IPP may have resulted in estimates that are in Telecom's favour. For example, the allocation of Telecom (Chorus) costs by actual usage (such as occupied rack units in the case of the cabinets, and actual fibres used in the case of backhaul), is likely to mitigate the risk faced by Telecom (Chorus) in delivering these services, and the benchmarked betas may not reflect such risk-mitigation. In other words, the pricing structure of the Sub-loop Co-location and Sub-loop Backhaul Services is such that there is little risk that the Access Seeker may use Telecom's Distribution Cabinet, fibre or active backhaul equipment (which the cost of capital is applied to), without paying for the proportion of the determined cost of the relevant asset.

494. Furthermore, the Commission has also noted the implications of using a pre-tax analysis on the cost of capital.

495. In light of these factors, and given the context of the IPP which is itself an approximation of efficient costs, the Commission considers it unlikely that the resulting access prices will be too low.

496. Accordingly, the Commission does not consider that any further adjustment is required to account for the risk of asymmetric outcomes in setting access prices too high or too low.

497. In respect of the asset life of Distribution Cabinets, the Commission has also reduced the expected economic life of the distribution cabinets, from 20 years to 10 years. This has a material effect in increasing the resulting monthly rental for the Sub-loop Co-location Service, and will reduce the risks associated with potential stranding. In addition, as discussed elsewhere, it is conceivable that the cabinets currently being deployed will be used in a FTTH deployment, or greater probability of delay, rather than advancement, in the proposed FTTH deployment.

498. While there may be risks associated with technological change, the Commission notes that in submissions throughout these proceedings, Telecom has not proposed that a tilt factor be used in the annuities used to generate monthly charges. Such tilts can have the effect of front-loading depreciation.

499. The Commission has addressed arguments in relation to the relevance of real options earlier in this STD.[210] Telecom's FTTN investment is replacing part of

[210] See paragraphs 132 to 143.

the legacy UCLL (for example, by replacing the copper feeder with fibre), and existing retail services will continue to be supplied over the Sub-loop Services. This is likely to limit the relevance of any option value in the current case.

500. The Commission also notes Covec's submission on the relevance of real options in the current case.[211] In responding to Professor Hausman's submission on real options, Covec argued that any option value that did exist is no longer relevant for most of the relevant assets, as the option to delay investment was extinguished by Telecom's commitments in the Separation Undertakings.

501. The Commission has taken into account the impact of the global recession in its consideration of the debt premium as well as the risk-free rate. In particular, the Commission has allowed for a debt premium which lies towards the top end of the range considered by Ofcom, and which is also consistent with the premium currently observed on Telecom's corporate bonds. On the risk-free rate, the Commission has recognised that the use of short averaging periods would result in a relatively low risk-free rate,[212] and that it is appropriate in this case to use averages over a longer period to establish a risk-free rate.

502. The Commission considers that it has properly taken account of the global financial situation in this determination.

503. In light of the above, the Commission does not consider that any further adjustments are required for the purposes of accounting for risk.

[211] Covec, *Cross-submission: Access to Sub-loop Services*, 30 October 2008, section 3.3.
[212] For example, the use of the spot rate or 3-month average would result in a risk-free rate of around 4.0%, compared to the Commission's 5.18% used in this determination.

PRICE TERMS - RELATIVITY

Introduction

504. Telecom' unbundled copper local loop service, as set out in subpart 2 of Part 1 of Schedule 1 of the Act, provides the following "additional matters that must be considered regarding the application of section 18":

> The Commission must consider relativity between this service and Telecom's unbundled bitstream access service (to the extent that terms and conditions have been determined for that service).

505. This section sets out the Commission's consideration of the relativity between the Sub-loop UCLL Service and the UBA Service.

Consideration of Relativity

506. According to Telecom (Chorus), the draft STD misrepresented the way in which the Commission treated relativity in the UBA STD. Telecom (Chorus) claimed that in the UBA STD, the Commission did not assess relativity between the UCLL and UBA services on the basis of relative costs of the two services.

507. The Commission disagrees with Telecom (Chorus) on the way in which relativity should be assessed, and on the way in which Telecom (Chorus) suggests relativity was assessed by the Commission in the UBA STD.

508. The Sub-loop UCLL, full UCLL, and UBA services represent different levels of access to Telecom's fixed network. To assess the relativity between regulated prices of two services at different functional levels (such as full UCLL and UBA), consideration needs to be given to the differences in costs of the two services. As discussed below, and despite Telecom (Chorus)'s claim to the contrary, this is what was discussed and applied in the UBA STD, where the Commission considered the relativity issue.

509. In the UBA STD, the cost differences between the UCLL and naked UBA service were discussed (for example, the cost associated with DSLAM equipment and backhaul from the DSLAM to the First Data Switch). The relevant illustration of these cost differences that was used in the UBA STD is reproduced in Figure 9.

Figure 9: Comparison of UCLL and UBA (without POTS) Cost Components

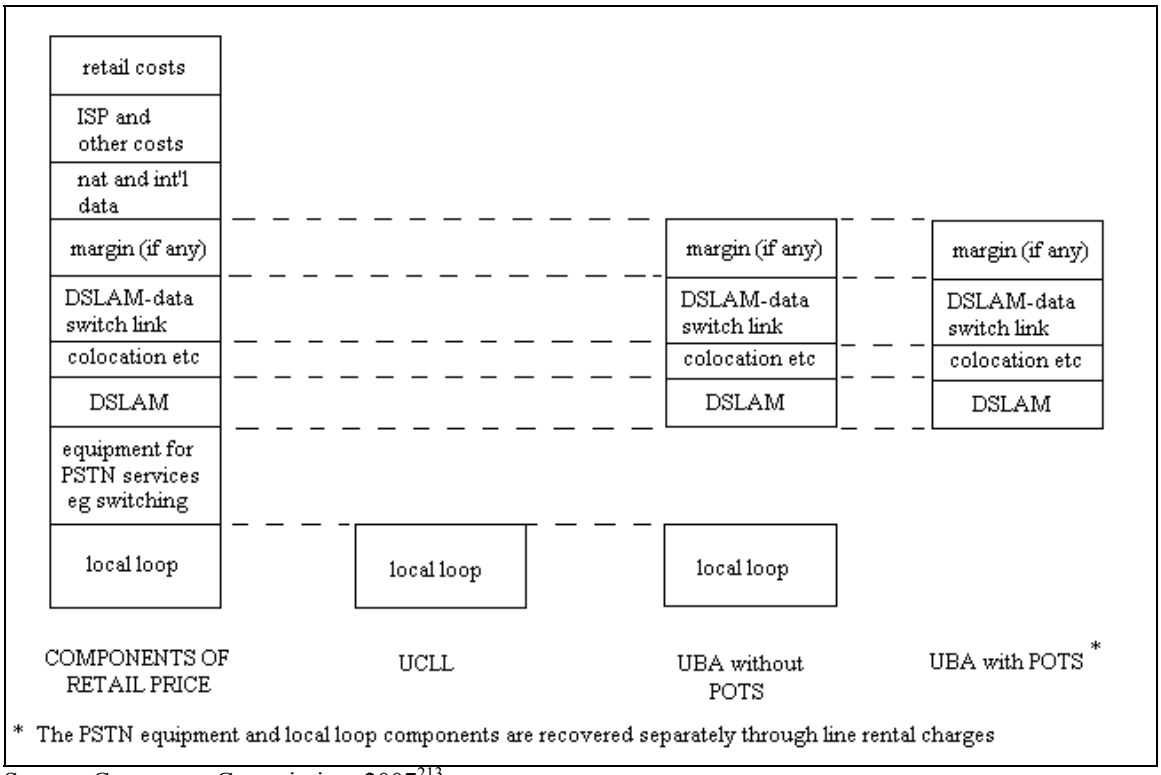

Source: Commerce Commission, 2007[213]

510. Referring to this figure, the Commission noted in the UBA STD that relativity between the UCLL and UBA (without POTS) services (i.e., the second and third stacks in the figure) could be assessed using a top-down or a bottom-up approach.[214]

511. Under a top-down approach, the Access Seeker considers whether to move from the UBA (without POTS) service to the UCLL service.[215] In doing so, the Access Seeker will avoid paying the UBA (without POTS) price, but instead will have to invest in its own infrastructure housed in the local Exchange. In other words, it will no longer 'rent' DSLAM capacity from Telecom, but will instead invest in its own DSLAM capacity. If the Access Seeker's costs are reduced as a result, the UBA (without POTS) and UCLL prices are likely to meet the relativity requirement.

512. A bottom-up approach considers the components required to replicate the UBA (without POTS) service, using the UCLL service.[216] If the UBA (without POTS) service can be economically replicated using the UCLL service – that is, an Access Seeker can use the UCLL service to build a competitive UBA service – the UBA and UCLL prices will be set at an appropriate relativity in order to best give, or likely to best give, effect to section 18 of the Act.

[213] Commerce Commission, *Decision No. 611: Standard terms determination for the designated service Telecom's unbundled bitstream access*, 12 December 2007, Figure 4, p 80.
[214] ibid, paragraphs 431-432.
[215] ibid, paragraph 435.
[216] ibid, paragraph 434.

513. Therefore, the Commission considers that the claim by Telecom (Chorus) that in the UBA STD the Commission did not assess relativity on the basis of relative costs is incorrect.[217]

514. The Commission considers that the above discussion of relativity between the full UCLL and UBA services can be extended to the Sub-loop UCLL service.[218] As noted in the draft STD, the Sub-loop MPF is a component of the full UCLL MPF, with the key difference being that part of the full UCLL MPF that lies between the Distribution Cabinet and the Exchange (i.e., the 'feeder'), which is not part of the Sub-loop MPF. Consistent with the approach taken in the UBA STD, the relativity between the Sub-loop UCLL Service and the UBA Service can be assessed with reference to Figure 10.

Figure 10: Comparison of Sub-loop UCLL and UBA (without POTS) Cost Components

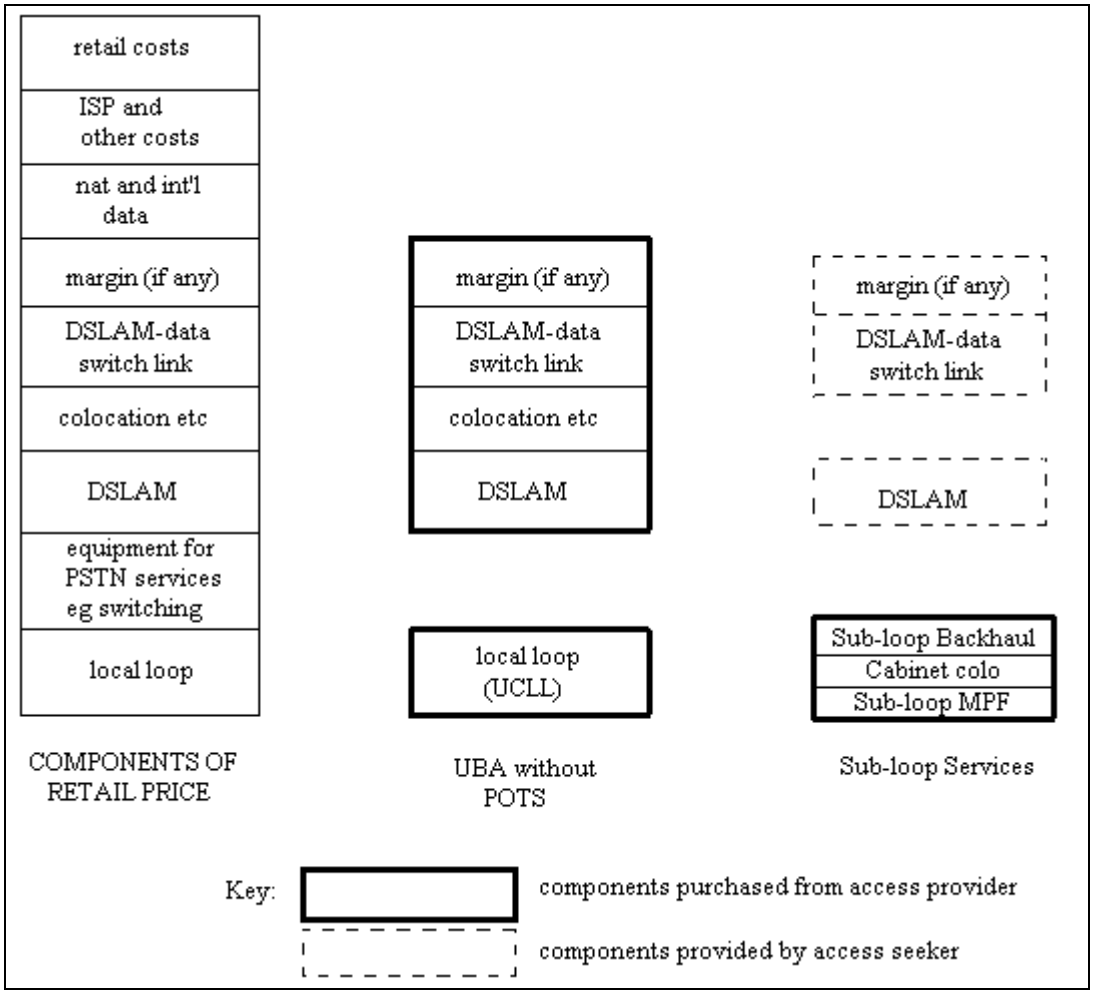

Source: Commerce Commission, 2009

[217] See paragraphs 432-440. The UBA STD also made the point that the additional costs incurred by the Access Seeker in replicating naked UBA using UCLL (e.g., the DSLAM equipment costs) are likely to be less than the costs avoided by the Access Seeker when moving from naked UBA to UCLL (same costs, plus any profit margin in Telecom's retail price), due to the UBA price being set according to a retail-minus pricing principle, while the UCLL price is cost-based (paragraph 440 of UBA STD).

[218] See the discussion below regarding the 'ladder of investment', of which (as noted below by Ofcom) the sub-loop service is a component.

515. As is evident from Figure 5, the Sub-loop MPF relates to that part of the full MPF that connects the End User to the Distribution Cabinet. The residual component of the full UCLL MPF relates to the feeder link from the cabinet to the local Exchange. Figure 10 therefore extends the relativity diagram used in the UBA STD, to include the distribution sub-loop and feeder cost components of the full UCLL MPF. Under the Sub-loop Services column in Figure 10, co-location at the cabinet is also included, while co-location at the exchange is excluded.

516. In assessing the relativity between the Sub-loop UCLL and UBA Services, the Commission has considered whether the sub-loop UCLL price would enable an Access Seeker to build up a wholesale service that is functionally equivalent to, and would be able to compete with, Telecom's UBA (without POTS) Service. To do this, an Access Seeker using the Sub-loop UCLL Service would also need the following components:

- DSLAM equipment (housed in the cabinet rather than the Exchange);
- backhaul from the cabinet to the Exchange (Sub-loop Backhaul) and through to the first data switch in Telecom's network;[219] and
- co-location for Access Seeker equipment.

517. When combined with the Sub-loop UCLL Service, the above components would provide a wholesale transmission service from the End User to Telecom's first data switch, including the access line. This is functionally equivalent to the UBA (without POTS) service.

518. The Commission considers that such an assessment of the relative costs associated with different access products such as UBA (where access is granted to Telecom's DSL capacity), UCLL (where access is granted to the copper line between the Exchange and the End Users), and Sub-loop UCLL (where access is to the copper distribution line between the cabinet and End User), is necessary to ensure that efficient entry decisions are made by Access Seekers. Allowing such entry decisions to be made will best give, or be likely to best give, effect to the section 18 requirement to promote competition for the long-term benefit of End Users.

519. According to the 'ladder of investment' concept of access pricing, relative access prices should encourage Access Seekers to make efficient entry decisions, including transferring between access products, such as from the UBA service to the Sub-loop UCLL Service.[220] Specifically, the intention is to provide Access Seekers with an incentive to move from one 'rung' to another

[219] While an Access Seeker with equipment in the cabinet may not require backhaul to Telecom's first data switch, in principle the relativity comparison is with Telecom's UBA service which is defined to terminate at the first data switch.

[220] In the Ofcom report to which Professor Hausman refers in his submission on the draft STD, Ofcom notes that sub-loop unbundling "represent{s} a move up the ladder of investment for competitive operators". Ofcom, *Regulatory challenges posed by next generation access networks*, 23 November 2006, paragraph 4.80.

(such as from resale to UBA to UCLL), and in doing so to increase their investment over time.

520. In making such an assessment, it is important to have regard to the relative costs of moving between rungs, as the Commission did in the UBA STD. In the absence of any consideration of relative costs, which is what Telecom (Group) and Telecom (Chorus) propose, the rungs may be too close (thereby encouraging inefficient investment by Access Seekers), or too far apart (preventing efficient investment by Access Seekers).

521. For these reasons, and contrary to the submissions from Telecom (Group) and Telecom (Chorus), the Commission considers that relativity cannot be meaningfully assessed in a principled manner without reference to relative costs between the relevant access products. Even in cases where the full UCLL service is replaced by the Sub-loop UCLL Service (in which case, as noted by LECG[221] and Professor Hausman,[222] the two services may not be available as competing access products), the above framework will help ensure that efficient prices are determined, which are likely to best give effect to section 18 of the Act. The Commission notes that in the case of dual-fed cabinets, both the Sub-loop UCLL Service and the equivalent of the feeder portion of the UCLL Service will be available to Access Seekers.

522. In making the above comparison, the Commission has taken account of the following. First, there are likely to be a number of additional costs associated with supplying a cabinet-based UBA service that would not be incurred when supplying an Exchange-based UBA service. These include the costs of the Distribution Cabinet, as well as any risk-adjusted capital costs associated with deploying new fibre-based backhaul services. Such cost differentials should be allowed for when comparing the cost-based price of cabinet-based and Exchange-based services.

523. Second, it is possible that the retail price for new higher capacity, cabinet-based services will be higher than for existing services delivered from the Exchange. A number of parties submitted that Telecom does not currently distinguish between the retail prices of cabinet- and Exchange-based retail services.[223] At the Commission's conference, Telecom (Chorus) noted that given the early stage of the cabinetisation programme,[224] it would be unrealistic to expect such differentiation. Professor Hausman referred to the US, where consumers were prepared to pay more for higher speed services.[225]

524. In the New Zealand context, TelstraClear's VDSL2 offerings provide an example of retail broadband plan prices differing by the speed of the plan. For example, TelstraClear's BizNet Supreme has a download speed of 30 Mbps and at a price of $399.95 per month, while the BizNet Premium plan has a download

[221] LECG, *Price benchmarking of sub-loop UCLL, backhaul and co-location services*, 14 October 2008, paragraph 21.
[222] Professor Hausman, *Cross-submission on draft Sub-loop Services STD*, 30 October 2008, paragraph 6.
[223] See for example, Covec's submission, page 11.
[224] Sub-loop Services Conference, *Transcript*, 9 December 2008, p 215. Telecom (Chorus) noted that just over 200 cabinets had been deployed to date, out of a total of around 3,600.
[225] ibid.

speed of 15 Mbps at a price of $199.95 (plus data charges), both of which are markedly above the standard price for ADSL-type services offered in the New Zealand marketplace.[226] This provides an indication of higher prices emerging for new high-speed services, which may also occur as a result of the FTTN investment.

525. Third, the Commission notes that the UBA prices are set according to a retail-minus pricing principle, whereas the UCLL (including the sub-loop UCLL) prices are determined according to a forward-looking cost-based pricing principle. The wholesale price of the UBA service will therefore include any margin that is built into Telecom's retail prices used to derive the wholesale price, whereas the cost-based sub-loop UCLL price should only provide for a normal return. As noted in the UBA STD,[227] the whole UBA price may exceed the cost of supplying a UBA service, which will provide Access Seekers with an incentive to invest in their own capacity (and take up the Sub-loop UCLL Service), in order to capture any such margin.

526. The Commission has taken the above factors into account when assessing the relativity between the Sub-loop UCLL service and the UBA service. This is particularly important in relation to the difference between UCLL charges and the charges for the Sub-loop Services (which essentially replace the UCLL service), as set out in Table 15.

[226] http://www.telstraclear.co.nz/business/products/internet/biznet/
[227] Commerce Commission, *Decision No. 611: Standard terms determination for the designated service Telecom's unbundled bitstream access*, 12 December 2007, paragraph 440.

Table 15: Comparison of the prices of all Sub-loop Services (UCLL, Co-location and Backhaul) to the UCLL Service (including non-recurring charges)[228]

CHARGE TYPE	CHARGES PER END USER	
	URBAN	NON-URBAN
Sub-loop MPF recurring	$ 11.99	$ 22.14
Sub-loop MPF non-recurring	$ 5.11	$ 5.11
Sub-loop MPF	**$ 17.10**	**$ 27.24**
Sub-loop Backhaul recurring	$ 10.16	$ 14.24
Sub-loop Backhaul non-recurring	$ 1.14	$ 1.14
Sub Backhaul	**$ 11.30**	**$ 15.39**
Sub-loop Co-location recurring	$ 2.78	$ 2.78
Saving on power charge (vs UCLL Co-lo)	$ 1.84	$ 4.05
Sub-loop Co-location	**$ 0.93**	**-$ 1.27**
Sum of Sub-loop Services	$ 29.33	$ 41.36
UCLL MPF	$ 23.35	$ 40.14
Ratio	**126%**	**103%**
Difference	**$ 5.98**	**$ 1.21**

Source: Commerce Commission, 2009

527. Table 15 indicates that the costs incurred by the Access Seeker per End User for the Sub-loop Services are higher than the UCLL MPF charges. The Commission also notes that the difference in Table 15 is greater for urban lines than for non-urban lines.

528. The Commission considers that these differences do not necessarily mean that the prices have been set at a level that does not take into account relativity. Firstly, the specific conclusions will depend upon a number of factors, such as the Sub-loop Backhaul recurring charge incurred by an Access Seeker (which varies by the number of fibres). There would also be savings in the UCLL Co-location charges that would be applicable under the UCLL Co-location (such as the space rental and the costs of building new rack space in an Exchange), the inclusion of which would reduce the difference between the Sub-loop Services and UCLL Service.

529. Second, the Commission considers a level of difference between the Sub-loop Services charges and the UCLL charges is appropriate given that the Sub-loop Services cost more to provide than the UCLL service. For example, replacement of a passive cabinet with an active Distribution Cabinet is a cost that Telecom should be able to recover through the Sub-loop Services charges. Failing to recognise the efficient costs of providing the Sub-loop Services, by setting

[228] Key assumptions include that the non-recurring Sub-loop UCLL and Sub-loop Backhaul charges are recovered over 2-years and 4-years, respectively, the Access Seeker has 50% market share of 210 customers, and uses 1 fibre for backhaul and 6 Rack Units for co-location in a Distribution Cabinet where a total of 3 fibres and 20 Rack Units are used. In addition, the Commission has estimated the net reduction in power costs as a result of shifting equipment out of the exchange and into the cabinet. The exchange-based power charge is based on Service Component 2.2 of the UCLL Co-location Price List (16A-48V DC Power Capacity), updated to May 2009 (using the urban power charge, and an average of the suburban and rural exchange power charges). The cabinet-based power charge is based on Service Component 2.2 of the Sub-loop Co-location Price List (Power), where the power capacity charge is shared between 2 parties, and the electricity charge ($6.37/amp/month) is applied to a 16-amp fuse.

charges below efficient cost is unlikely to give best effect to section 18 of the Act.

530. Third, as noted in paragraph 524, the Commission considers that the potential to deliver new retail services over a cabinet-based infrastructure may justify the additional costs of supply when compared to Exchange-based services. For example, in considering the viability of Sub-loop Services relative to full local loop services in other jurisdictions, Analysys made an allowance for incremental retail revenues from cabinet-based services (compared to Exchange-based services).[229] Given that existing customers will be migrated onto Sub-loop Services, Access Seekers would need to recover the incremental cost of Sub-loop Services compared to the UCLL Service through any incremental revenue from new services, increased take-up of current services (such as broadband internet services), or reduced margin on current services.

531. Accordingly, the Commission notes that it has given appropriate consideration to the issue of the relativity between the regulate charges for the Sub-loop UCLL Service and the UBA Service, in setting prices that are likely to give best effect to section 18 of the Act.

[229] See Analysys, *Final Report for ComReg: The business case for sub-loop unbundling in Dublin*, 20 December 2007. In their base scenario, Analysys assumed an incremental increase in retail revenue of 5 euros per month.

PRICE TERMS – SUNDRY CHARGES

Introduction

532. This section sets out the reasons for the Commission's significant decisions in relation to the sundry charges for the Sub-loop Services as provided in the price lists in Schedule 2 of Service Appendices 1, 2 and 3.

Sundry Charges

Sub-loop UCLL urban / non-urban split of cabinets

533. Under the draft STD the Commission proposed that the distinction between whether the urban or non-urban Sub-loop UCLL MPF rental would be payable was made based on the designation under the UCLL STD of the Local Exchange to which the relevant Distribution Cabinet was parented. For example, if the Sub-loop MPF was terminated on a Distribution Cabinet that was parented on a Local Exchange that was defined as non-urban under the UCLL STD, the non-urban Sub-loop MPF charge would be payable.

534. Telecom (Chorus) submitted that the method for categorising whether the urban and non-urban charge was payable was problematic in circumstances where the Distribution Cabinet was re-parented to a 'higher order' urban Exchange. Telecom (Chorus) proposed that an alternative option of mapping the location of Distribution Cabinets to Statistics NZ meshblocks in the same manner as Exchanges were under the UCLL STD would result in the same 70:30 of urban to non-urban lines.[230]

535. In order to ensure that Telecom is not unduly penalised for network reconfiguration, and that the Sub-loop UCLL charge is a more accurate reflection of the likely costs of providing the service, the Commission has determined that the urban/non-urban categorisation of a Sub-loop MPF will be based on the location of the Distribution Cabinets where the MPF is terminated.

536. A list of all urban and non-urban Distribution Cabinets, which will be maintained by the Commission, is set out in Appendix A to the Sub-loop UCLL Price List.

Project management charges – Sub-loop UCLL Price List service component 1.9 and 1.10

537. Consistent with the UCLL STD, the draft Sub-loop UCLL Price List set out a $25 charge for project management for circumstances where an Access Seeker's End User relinquished the service at one location and required the Sub-loop UCLL Service at their new address.

[230] Telecom (Chorus), *Submission on draft standard terms determination for Telecom's sub-loop services*, 15 October 2008, p 42-43.

538. Orcon, Kordia and CallPlus submitted that this charge should be removed as there is no need for project management when an End User moves address.[231]

539. Telecom (Chorus) submitted that the $25 fee is for the co-ordination of the relinquishment of the connection at the old address and the establishment of the connection at the new address, so that there is no disruption to the End User. Telecom (Chorus) also noted that the Access Seeker is not required to use the service, and may order a relinquishment and connection separately at no additional $25 charge.[232]

540. Given that the project management charge is for an optional additional level of service (in that Telecom provisions two orders in a co-ordinated fashion) the Commission has determined that this charge should remain at $25.

Pre-qualification - Sub-loop UCLL Price List service component 3.1 and 3.2

541. The draft STD set out a charge of $1.93 per address (which is the amount that Telecom is currently levying for the UCLL Service) for providing pre-qualification information on to Access Seekers to assist with their orders.

542. Orcon, Kordia and CallPlus submitted that the charge should be a standard monthly charge, which would provide an appropriate level of reimbursement for development costs of the system and encourage competitive outcomes.[233]

543. Vodafone submitted that pre-qualification information should be provided without charge, and that at a minimum the information used to calculate attenuation should be free, as in the case of other jurisdictions.[234]

544. Telecom (Chorus) responded that it would not be fair to pass on substantial unrecoverable costs to Telecom by not having a fee for pre-qualification information especially given that only 12% of the cost of the system is being recovered, and that it would also be unfair on smaller customers to have a fixed monthly charge.[235] In regards to the specific issue of attenuation information, Telecom (Chorus) responded that they are investigating the work required to provide the information requested by Vodafone.

545. The Commission does not consider that sufficient new information has been provided to justify revising the preliminary view taken in the draft STD to include this charge (given it is included under the UCLL STD). Nor does the Commission consider that there are efficiency benefits from establishing a fixed monthly charge (as smaller Access Seekers would be unfairly penalised). Therefore, no change has been made to the charge of $1.93 per address.

---

[231] Orcon, Kordia, CallPlus, *Submission on draft standard terms determination for Telecom's sub-loop services*, 15 October 2008, p 16.
[232] Telecom (Chorus), *Submission on draft standard terms determination for Telecom's sub-loop services*, 15 October 2008, p 62.
[233] Orcon, Kordia, CallPlus, *Submission on draft standard terms determination for Telecom's sub-loop services*, 15 October 2008, p 16.
[234] Vodafone, *Submission on draft standard terms determination for Telecom's sub-loop services*, 15 October 2008, p 22.
[235] Telecom (Chorus), *Cross-submission on draft standard terms determination for Telecom's sub-loop services*, 31 October 2008, p 24.

Migration

546. In the draft STD, the Commission set out a charge of $34.43 for each Migration, which entails the transfer from an Exchange-based copper access service to Sub-loop UCLL. This was based on cost information provided from Telecom (Chorus) for 295 Distribution Cabinets.

547. Telecom (Chorus) submitted that the proposed charge is insufficient to recover costs because it does not recover the cost of migrating non-broadband lines (presumably because Telecom will continue to provide historical telephone service form the Exchange) and additional costs associated with completing the Migration after the Distribution Cabinet has been unbundled.

548. Telecom (Chorus) elaborated on the Migration costs that would need to be imposed, as follows:

- 'Stage 1'- connection of the new Distribution Cabinet to the existing copper network (i.e., so that the copper line effectively goes through the Distribution Cabinet to the Exchange rather than the older passive cabinet);
- 'Stage 2' – connection of jumpers to Access Seeker equipment installed in the cabinet at the same time as the jumpers are removed from the Access Seeker's Exchange-based equipment; and
- Subsequent Migration – a separate visit to the Distribution Cabinet after it has been installed in order to connect jumpers to Access Seeker equipment installed in the cabinet, at the same time as the jumpers are removed from the Access Seeker's Exchange-based equipment. Telecom (Chorus) proposed a cost-based fee of $130.23 for a subsequent Migration and $97.67 for 10 or more subsequent Migrations.[236]

549. Telecom (Chorus) proposed that stage 2 costs should be recovered on the basis of the cost of the work undertaken being shared proportionally between Telecom and Access Seekers according to the number of lines connected to each party's DSLAM. Telecom (Chorus) considered that stage 1 costs could either be recovered in a similar fashion to stage 2 costs, or included in the Distribution Cabinet rental.[237]

550. Based on further information provided by Telecom (Chorus) the Commission understands that the stage 1 costs are already included in the estimate of the average cabinet cost, and will therefore be included in the Sub-loop Co-location rental charge.[238]

551. The Commission also determines that given that stage 2 costs will change depending upon the number of lines migrated, these costs should be recovered on a POA basis according to the cost of the work undertaken being shared

[236] Telecom (Chorus), *Submission on draft standard terms determination for Telecom's sub-loop services*, 15 October 2008, p 55-61.
[237] Telecom (Chorus), *Submission on draft standard terms determination for Telecom's sub-loop services*, 15 October 2008, p 55-61.
[238] Telecom (Chorus), *Letter to the Commerce Commission*, 11 May 2008.

proportionally between Telecom and Access Seekers according to the number of lines connected to each party's DSLAM.

552. In regard to subsequent Migrations, the Commission considers that there is significant potential for a lower price than the $130 per connection submitted by Telecom (Chorus) given that, by definition, this work may occur at the same time that the Access Seeker installs their equipment in the Distribution Cabinet. Accordingly, the Commission considers that this charge should be determined on a POA basis. Furthermore, this decision is consistent with the decision in relation to stage 2 Migration costs.

Grooming

553. The draft STD included a service where Telecom would rearrange equipment, such as HDP block and cable ties, to make termination space available in the Distribution Cabinet. The Commission considered that the cost of Grooming to realise unused capacity should be covered by Telecom on the grounds that it is the party that is best able to influence the location of HDP blocks and termination space.

554. Telecom (Chorus) submitted that where Grooming is initiated by an Access Seeker, then Telecom must be able to recover the cost of deploying field service contractors to carry out the work. Telecom (Chorus) suggested that a POA charge be inserted in the Sub-loop UCLL Price List.[239]

555. At the Sub-loop Services Conference parties generally agreed to a concept of 'causer pays' as an important underlying principle in setting the terms of the STD.[240] If the Commission were to accept this principle, the primary issue becomes one of defining which party causes the need for Grooming. In this case it is not clear that there is an easily identifiable party that causes Grooming costs to be incurred.

556. The Commission considers that one option is that the Access Seeker whose order triggers the need for Grooming pays for the full cost. However, the need for Grooming may have been caused by parties already in the Distribution Cabinet using space inefficiently.

557. Another option is that the ordering Access Seeker is only liable for those Grooming costs that are not caused by already existing configurations that are inefficiently using space on and around the distribution frame. Unfortunately, there are likely to be significant practical issues in determination of what is an inefficient or efficient use of space, which would increase uncertainty.

558. Given the practical issues associated with clearly defining a 'causing party', the Commission's considers that the Grooming costs should be recovered by charging the Access Seeker whose order triggers the need for Grooming.

---

[239] Telecom (Chorus), *Submission on draft standard terms determination for Telecom's sub-loop services*, 15 October 2008, p 52.
[240] Sub-loop Services Conference, *Transcript*, 8 December 2008, p 93.

559. The Commission also considers that Grooming of termination space is relevant to both the Sub-loop UCLL and Sub-loop Co-location Services, and has accordingly been included in both Price Lists.

560. The Commission has also included an additional provision in the Sub-loop UCLL and Sub-loop Co-location Operations Manuals to the effect that Telecom must use all reasonable endeavours to arrange equipment in an efficient manner. The intention of this provision is to put the emphasis on Telecom to allocate space in an efficient manner in order to prevent any unnecessary future Grooming of the Distribution Cabinet.

Co-location power charge

561. The Commission has re-calculated the sundry power charge so that is it consistent with the decisions made in relation to the annualisation of Distribution Cabinets and backhaul costs. Specifically, the Commission has determined that the appropriate cost of capital is 12.4% (pre-tax) and that the maximum asset life should be 10 years. The resulting charges are $110 per month where a transformer is required and $194 per month where a transformer is not required, which would be in the majority of circumstances. Consistent with Telecom's STP and the draft STD, Access Seekers are to pay a proportion of these charges based on the proportion of the power capacity they use in the specific Distribution Cabinet.

Use it or lose it – Sub-loop Co-location Price List

562. Telecom (Chorus) submitted that under the 'Use-it-or-lose-it' process set out in the Sub-loop Co-location Operations Manual, Telecom would be required to monitor use of rack units in Distribution Cabinets, liaise with those parties that do not use their allocation of space and remove unused equipment, which would require a full time employee.[241]

563. The Commission notes that the administrative costs of operating the 'Use-it-or-lose-it' process has been included in the Telecom (Chorus) estimate of the operating costs of the Distribution Cabinet. Furthermore, the Commission has also included a POA charge in the Sub-loop Co-location Price List (under service component 1.20) for Telecom to recover the costs of removal of an Access Seeker's unused equipment.

Adjustment mechanism – Sub-loop Co-location Price List service components 1.6 and 1.7

564. For the draft STD the Commission removed the proposed price change mechanism for security cards and security keys on the grounds of consistency with the UCLL Co-location STD. Telecom (Chorus) submitted that a price change mechanism is necessary because the costs of providing the security key

[241] Telecom (Chorus), *Submission on draft standard terms determination for Telecom's sub-loop services*, 15 October 2008, p 53.

and access cards may change and that a similar amendment should be made to the UCLL Co-location STD.[242]

565. The Commission notes that while the UCLL Co-location STD did not include a price change mechanism for these service components, the issue was not specifically considered and also considers there is merit in the argument put forward by Telecom (Chorus) for including such a mechanism. Accordingly, the Commission has included a price change mechanism for service components 1.6 and 1.7 of the Sub-loop Co-location Price List.

[242] Telecom (Chorus), *Submission on draft standard terms determination for Telecom's sub-loop services*, 15 October 2008, p 55.

NON-PRICE TERMS

Introduction

566. The following sections provide explanation and reasons for the substantive changes, deletions or additions made to the draft Sub-loop Services STD in order to form the final Sub-loop Services Terms that appear in Appendix A.

567. Many of the terms in the Sub-loop Services General Terms and schedules are common to the UCLL Backhaul, UBA Backhaul, UBA, UCLL and UCLL Co-location STDs.

568. The Commission has made a number of amendments to improve consistency with provisions set out in previous STDs, particularly the UCLL Backhaul STD. The Commission considers that, unless there are compelling reasons for differences between STDs, having consistent non-price terms is efficient and removes the costs of the same parties needing to deal with different non-price terms for similar services.

569. In addition, in determining the non-price terms, the Commission has made amendments to the draft STD, where the Commission considers that amendment is required in order to best give effect to section 18 of the Act.

570. In some instances the Commission may have agreed with the general submission made by a party, but did not consider the proposed alternative wording to be appropriate. In such cases, the Commission has made amendments using its own wording.

Space Allocation

Space allocation rules in the draft Sub-loop Services STD

571. In the draft Sub-loop Services STD the Commission proposed a series of space allocation rules that it considered would best give effect to section 18 of the Act.[243] The Commission's proposed space allocation rules were significantly different from those agreed by the TCF and included in Telecom's STP.[244] For example, in relation to the removal of provisions relating to prioritisation and, in particular, the funder priority for new Distribution Cabinets.

572. In submissions on the draft Sub-loop Services STD, Telecom (Group), Telecom (Chorus) and Vector broadly opposed the Commission's proposed space allocation rules, and proposed reverting to the space allocation rules agreed by the TCF and included in Telecom's STP. Telecom (Group) submitted that the Commission's proposed rules may prevent Telecom (Wholesale) from meeting its regulatory obligations, that the 50% space cap is arbitrary and unworkable, and that the rationalisation rules were inefficient and unworkable. Telecom (Group)[245], Telecom (Chorus)[246] and Vector all submitted that funder priority over space allocation should be reinstated.

573. Telecom (Group) and Covec both submitted that space contention would be the exception, and that the space allocation rules needed to recognise this and not necessitate unnecessary rationalisation or additional capacity being built.

574. TelstraClear supported the market share assessment process with 12 month guaranteed occupancy period provided for in the Commission's proposed space allocation rules, subject to changes to timeframes for rationalising Rackprints. Covec considered that the market share assessment process in the Commission's proposed space allocation rules appeared consistent with facilitating efficient competition.

575. In contrast, Orcon proposed an alternate combination of space allocation rules so that either Telecom should be limited to one-third the space in standard Cabinets, or Telecom (Chorus) must build larger Cabinets, or Telecom (Chorus) can choose the size of initial build if they are required to build additional capacity if Access Seekers make firm orders for space and it is not available. Orcon also proposed that all 'Whisper Cabinets' should be New Distribution Cabinets, subject to the 50% space cap and rationalisation, even if they had already been installed at the date of the STD.

---

[243] Commerce Commission, *Draft Sub-loop Services STD*, 5 September 2008, p 79-87, paragraphs 288-321.
[244] Telecom (Chorus), *Standard Terms Proposal for Telecom's Sub-loop Services,* 27 June 2008, Submission, p 11-13, paras 36-41; p 22-23, paras 76-83; p 55, paras 224-228.
[245] Telecom (Group), *Sub-loop services draft STD – Submission*, 15 October 2008, p 46, para 36.
[246] Telecom (Chorus), *Submission on draft standard terms determination for Telecom's sub-loop services*, 15 October 2008, p 14, para 58.

576. Orcon, Kordia and CallPlus all supported the deletion of funder priority from the Sub-loop Co-location Operations Manual.[247]

577. At the Sub-loop Services Conference a key theme expressed by many parties was the importance to industry of providing a more flexible and realistic set of space allocation provisions.

Revised space allocation rules following the Sub-loop Services Conference

578. Following the Sub-loop Services Conference, the Commission sought additional feedback from interested parties on a proposed revised set of space allocation provisions, which aimed to achieve greater flexibility and simplicity.[248] The Commission indicated that its:[249]

> … preliminary view is that these changes to the space allocation rules best give, or are likely to best give, effect to section 18 of the Telecommunications Act 2001 on the basis that they allow greater flexibility for the parties to reach mutually agreeable solutions in allocating space, while reducing the costs and complexity faced by Access Seekers if space became constrained after a cabinet is installed.

579. In summary, the revised space allocation provisions provided:

- separate space allocation rules for New Distribution Cabinets and Installed Distribution Cabinets;
- where demand for space for New Distribution Cabinets was greater than the available space, then a negotiation process was provided to facilitate a mutually agreeable solution to the allocation of space;
- a Market Share Assessment process was included as a backstop to negotiations in the space allocation rules for New Distribution Cabinets; and
- where there was insufficient space in an Installed Distribution Cabinet to meet a Preliminary Order, then options were provided of Rearrangement, invoking the 'use-it-or-lose-it' policy or a negotiation process to facilitate a mutually agreeable solution ('an **Installed Distribution Cabinet space review process**'). The Commission notes that potential mutually agreeable solutions include, for example, another Access Seeker volunteering to replace their equipment with smaller equipment, Telecom agreeing to build additional capacity in the form of a Pedestal, or the Access Seeker choosing to install a hardened sealed DSLAM alongside a Distribution Cabinet.

580. The Commission noted that:[250]

---

[247] Orcon, Kordia and CallPlus, *Submission in response to the draft standard terms determination for the sub-loop services*, 15 October 2008, p 18, para 100.
[248] Letter from Commission to Interested Parties, *Sub-loop Services STD: Further Consultation*, 30 January 2009, and attachments: *Space allocation provisions* and *Proposed text for the space allocation provisions*.
[249] Commerce Commission, *Space allocation provisions*, 30 January 2009, page 2, para 4.
[250] Commerce Commission, *Space allocation provisions*, 30 January 2009, pages 3-4, paragraph 8.

The primary amendments to the space allocation rules proposed in the draft Sub-loop Services STD in comparison with the above proposed new rules are:

- removal of the 50% maximum space limit for Access Seeker equipment located in a Distribution Cabinet;
- removal of the Market Share Assessments for installed cabinets including the associated provisions for Rationalisation and the Guaranteed Occupancy period; and
- inclusion of a set period to allow Telecom and each Access Seeker to negotiate a proposed solution to the space allocation problem without invoking the formal allocation rules prescribed under the STD.

581. On 31 March 2009, the Commission also held an industry workshop (the '**space allocation workshop'**) to address practical space allocation issues, which were limited to the following issues:[251]

> a. How should the market share assessment calculation be made?;
> b. How should re-allocation of 'unused' space allocation occur?; and
> c. How should rounding of market share operate? …
> … [and] any consequential changes that are needed to the space allocation process, in relation to the above issues, in order to ensure that it is sufficiently flexible.

582. Given the changes in the Commission's proposed approach between the draft STD and the revised space allocation provisions summarised in paragraph 579 above, the following discussion addresses submissions during the consultation on the space allocation rules following the Sub-loop Services Conference and matters discussed at the space allocation workshop.

Funder priority

583. Submissions on the draft Sub-loop Services STD were made in favour of funder priority over space allocation (by Telecom (Group), Telecom (Chorus) and Vector) and opposed to funder priority over space allocation (by Orcon, Kordia and CallPlus), as discussed in paragraphs 572 to 576. The Commission notes that funder priority was not a part of the revised space allocation rules proposed by the Commission following the Sub-loop Services Conference, as set out in paragraph 579, and no submissions were received proposing that funder priority be inserted into the revised space allocation rules.

584. The Commission remains of the view that funder priority for cabinet space would potentially result in the inefficient use and allocation of space, which could fail to promote efficient competition through unnecessarily limiting take-up of the Sub-loop Services, and is therefore unlikely to best give effect to section 18 of the Act. For example, under such a scheme, Telecom would have absolute entry rights to space in the over 3,600 Distribution Cabinets planned to be installed or upgraded by the end of 2011, where sub-loop unbundling is most likely to occur, regardless of whether any other parties have a significant market share of the cabinetised lines and a desire to take-up the Sub-loop Services. Accordingly, the Commission has determined that funder priority of space in Distribution Cabinets should not form part of the space allocation rules.

[251] Letter from Commission to Interested Parties, *Sub-loop Services Standard Terms Determination – Space workshop on 31 March 2009: Matters for discussion*, 27 March 2009, page 2, paragraphs 6-7.

Submissions on the negotiations process in the revised space allocation provisions

585. Covec supported the provision for negotiations as a flexible way for resolving space allocation issues. Covec submitted that negotiations between Telecom and Access Seekers should be multilateral, not bilateral and that the Commission should be clear that negotiations are to be open, and that Access Seekers can negotiate with each other as well as with Telecom. Covec also submitted that the market share assessment should be performed at the outset of negotiations for a space-constrained new cabinet, and all relevant parties should be informed of the allocation that they will receive under that assessment.[252]

586. Vodafone similarly supported the flexibility provided by the provision for negotiations between Telecom and Access Seekers in the event of a space constraint. Vodafone submitted that further flexibility would be provided if these negotiations were multi-lateral where more than one Access Seeker is involved. Vodafone also submitted that it may be wise to perform the market share assessment calculation up-front, so that the base-line is understood by all parties.[253]

587. Orcon submitted that the default space allocation may result in a barrier for a market entrant or competitor with a small market share and that there must be a minimum space allocation (of 3 Rack Units) for a market entrant or competitor to Telecom.[254]

588. Telecom (Group) supported the additional flexibility of providing for a negotiated solution. In their cross-submission, Telecom (Group) submitted[255] that prescriptive 'backstop rules' are more likely to frustrate a negotiated solution that delivers lowest cost, and if in the future, it appears that the process requires more refinement it can be remedied at that time.[256]

589. Telecom (Chorus) supported good faith negotiations and submitted that a number of refinements be made to the negotiations process, including:

- providing more specificity to the good faith negotiations process obligations;
- where an Access Seeker does not meet the good faith negotiation requirements, then their Preliminary Order should be treated as if it were received after the First Assessment Date, i.e., not taken into account until all other Access Seeker's Preliminary Orders received on or before the First Assessment Date have been processed;

[252] Covec, *Submission on Additional Consultation on Sub-loop Backhaul and Cabinet Space Allocation*, 27 February 2009, page 5.
[253] Vodafone, *Sub-loop STD: Further Consultation – Response to Questions*, 2 March 2009, page 4.
[254] Orcon, *Untitled letter to Commission*, 2 March 2009, page 2.
[255] Telecom (Group), *Sub-loop Services Standard Terms Determination: Cross-Submission on Sub-loop Backhaul and Sub-loop Co-location Submissions on Further Consultation Papers*, 20 March 2009, page 5, paragraph 16.
[256] Telecom (Group), *Sub-loop Services Standard Terms Determination – Submission on Sub-loop Backhaul and Sub-loop Co-location Further Consultation Papers*, 2 March 2009, page 20, paragraph 83.

- configuration testing under section 42 of the Sub-loop Co-location Operations Manual and the Market Share Assessment process should run in parallel with the negotiations process;

- a market share assessment should also be undertaken within 10 Working Days of Chorus notifying its customers that there is insufficient space to accommodate Preliminary Orders received before the First Assessment Date, as this will both inform the negotiation process and aid with the timeliness of the process; and

- rather than rejecting orders where there is insufficient space to accommodate Preliminary Orders received before the First Assessment Date, those orders should be "parked" until the negotiation process is complete.[257]

590. TelstraClear supported the negotiation process, with a backstop of allocation based on market share if parties are unable to reach agreement.[258]

Commission decisions regarding the negotiations process in the revised space allocation provisions

591. The Commission has determined that the inclusion of a negotiations process in the space allocation provisions is appropriate, as it will lead to an efficient allocation of space, which is likely to best give effect to section 18 of the Act.

592. The Commission notes there was broad support at the space allocation workshop for bi-lateral negotiations (between Telecom and individual Access Seekers) in the first instance, followed by multi-lateral negotiations[259], should these be needed. The Commission has determined that this sequenced approach will efficiently manage the negotiations process and has reflected this in the space allocation provisions in the final Sub-loop Co-location Operations Manual.

593. As discussed further in paragraphs 673 to 677 below, the Commission does not consider that a minimum space allocation would be efficient or likely to lead to long-term benefits to End Users.

594. The Commission considers that the additional matters proposed for inclusion in the negotiation process by Telecom (Chorus), as described in paragraph 589 above, are likely to lead to a more efficient process for space allocation, in particular by providing for space allocation, negotiation and configuration testing processes to occur in parallel. In relation to some of these matters, such as the process for Access Seeker Equipment testing in relation to New Distribution Cabinets under clauses 15.2.10 to 15.2.14, the Commission considers that different amendments to those proposed by Telecom (Chorus) are required, to provide consistency within the Sub-loop Co-location Operations

[257] Telecom (Chorus), *Submission on Commission's Sub-loop Services Further Consultation Document*, 2 March 2009, pages 5 – 6, paragraphs 26-32, and page 31, clauses 1.4.3-1.4.6.
[258] TelstraClear, *Sub-loop Unbundling STD: Further Consultation*, 2 March 2009.
[259] See paragraphs 620 to 628 below for discussion of sharing of information to inform bi-lateral and multi-lateral negotiations.

Manual. In such cases, the Commission has made amendments using its own wording.

595. Telecom (Chorus) did not propose any specific provisions (including timeframes for completion) for Access Seeker Equipment testing in relation to Installed Distribution Cabinets. The Commission notes that in the absence of specific provisions, the Equipment testing requirements in section 42 would apply, and that these need to be complied with before a Preliminary Order can be fully processed in relation to an Installed Distribution Cabinet. The Commission considers that specific provisions are not required in this case, as there is not the same timing imperative associated with New Distribution Cabinets.

596. The Commission considers that it is important, as submitted by Covec, Vodafone, Telecom (Chorus) and TelstraClear, that the Market Share Assessment process should occur up-front, in order to provide a back-stop to the negotiations process. This will support efficient negotiations, by ensuring parties are aware of the space that they will be allocated should negotiations not reach an agreed outcome.

Submissions on the Market Share Assessment process in the revised space allocation provisions

597. Telecom (Chorus) submitted that:[260]

> There are numerous possible ways of measuring market share. For example, it could be based solely on UCLL lines, on UCLL and UBA lines, on UCLL, UBA lines and Telecom resale services, or on services provided rather than lines (POTS, broadband, etc); it could include non-Telecom wholesale services or could be a different mixture of these options. Any ambiguity will create confusion and possibly disputes. For example, it is not clear how resale lines would be allocated in the example at clause 1.2.5 where more than one provider provided services over the line.
>
> … apart from the simplest UCLL market share, a separated Telecom doesn't have the data to calculate the market share. …
>
> … under the Separation Undertakings we cannot access information on the number of resold UCLL or UBA lines, as this is Confidential Information, respectively, of our customers and of Wholesale. For this reason, we are unable to perform the market share calculation specified in the proposed rules.

598. Telecom (Group) submitted that:[261]

> The market share assessment needs to recognise that parties offering a PSTN emulation-type service from the exchange require two DSLAM ports – one for broadband and one for voice emulation services. Conversely, a party providing a VoIP service from the exchange requires only one DSLAM port to provide both broadband and voice.
>
> … The alternative is that parties migrating to the cabinet may be forced to relinquish voice customers, or to make a fundamental technology upgrade to VoIP-based services.

---

[260] Telecom (Chorus), *Submission on Commission's Sub-loop Services Further Consultation Document*, 2 March 2009, page 8, para 48-50.

[261] Telecom (Group), *Sub-loop Services Standard Terms Determination: Submission on Sub-loop Backhaul and Sub-loop Co-location Further Consultation Papers,* 2 March 2009, page 21, paras 89-90.

599. Orcon submitted that:[262]

> … If a customer receives both a voice and broadband service, the Service Provider requires double the space than if the customer receives a dedicated broadband service. This should be taken account of in the market share assessment.

Discussion of method of Market Share Assessment process at the space allocation workshop

600. At the space allocation workshop the Commission presented a number of questions regarding the types of services that could be taken into account in the Market Share Assessment process, and issues that may arise from different approaches to the Market Share Assessment process (e.g., a lines-based approach, a services-based approach or a mixed approach where lines would be split where multiple services were provided over the same line).[263]

601. During the discussion at the workshop on the method of Market Share Assessment process[264], Telecom (Group) and Telecom (Wholesale) clarified that their preferred approach would involve a ports based approach to Market Share Assessment.[265] This approach would include voice services in the Market Share Assessment process where voice requires a separate DSLAM port (i.e., the party is providing a voice service using voice emulation, rather than VOIP).[266]

602. No agreement was reached at the workshop on an approach that could be supported by Access Seekers, Telecom (Group) and Telecom (Chorus), although there was broad agreement that a review of the operation of the Market Share Assessment process would be appropriate, either after a fixed period of time or once a certain number of Market Share Assessment processes had occurred. The four options for the approach, including Telecom (Group)'s ports approach are therefore assessed further below.

Commission decisions regarding the market share assessment process in the revised space allocation provisions

603. The Commission notes that there remains considerable uncertainty about Access Seekers' plans for entering the Sub-loop Co-location area, the potential equipment and equipment configurations that Access Seekers could utilise[267], the likelihood of technological advances to the types of equipment that can be installed in Distribution Cabinets in the future and the development of alternatives to co-locating in Distribution Cabinets, including the use of self-contained hardened DSLAMs.

---

[262] Orcon, *Untitled letter to Commission*, 2 March 2009, page 2.
[263] Letter from Commission to Interested Parties, *Sub-loop Services Standard Terms Determination – Space workshop on 31 March 2009: Matters for discussion*, 27 March 2009, page 3, paragraph 15(a)–(d).
[264] Commerce Commission, *Transcript of Space Allocation Workshop,* 31 March 2009, p 1-25.
[265] ibid, p 6-8, comments by John Wesley-Smith and Brendan Dempsey.
[266] Telecom (Group), *Sub-loop Services Standard Terms Determination: Submission on Sub-loop Backhaul and Sub-loop Co-location Further Consultation Papers,* 2 March 2009, page 23, explanatory notes to market share assessment calculation.
[267] See responses from TelstraClear, Vodafone, Orcon, Telecom (Wholesale) and Telecom (Chorus) to the Commission's request for additional information, available on the Commission's website at http://www.comcom.govt.nz/IndustryRegulation/Telecommunications/StandardTermsDeterminations/SubloopUCLLservice/DecisionsList.aspx#1071.

604. The Commission considers, as a consequence of these elements of uncertainty, it is difficult to predict with certainty any practical issues that may arise during or as a result of the Market Share Assessment process. The Commission therefore considers that there should be a review under section 30R of the Act of the operation of the Market Share Assessment process, as discussed further below.

605. The Commission considers, however, that it is important to provide clear backstop rules for the Market Share Assessment process in the STD, for the efficiency reasons discussed in paragraph 596 above, although the Commission considers that there is a low likelihood that negotiations will not result in an agreed solution. The Commission has considered four options for calculating Market Share as the backstop rules, as set out below.

606. In assessing these options, the Commission considers that it is desirable to incentivise the migration over time to more long-term efficient solutions for the use of space. However, the Commission recognises that there are a number of technical and practical issues related to migrating to more long-term efficient solutions, and has also taken these into account, including:

- equipment that can serve a higher number of End Users per Rack Unit will save space and be more efficient;
- bonding, which doubles the capacity per End User but requires twice the number of lines and ports per End User, will require more space and will be less efficient than a change to a higher-specified technology (e.g., moving from ADSL to VDSL). However, bonding may be efficient in saving the need to increase inefficiently used cards;
- single port per line is, in the long-term, the most space, port and line efficient solution, subject to the density of cards, and is the most operationally efficient solution due to the use of fewer cards simplifying set-up and maintenance;
- multiple ports per line is, in the long-term, the most space inefficient solution, as it requires the most space, cards and ports, e.g., the proposed PSTN emulation model requires two ports and two cards per line, however, in the short to medium-term this may be an efficient solution due to the available technology and the unwillingness of End Users to migrate for their voice service from PSTN to VOIP; and
- Access Seekers and Telecom (Wholesale) will face technical and practical issues in relation to migrating from one technology to another, where this requires the installation of different or additional equipment. In this case, migration may be a significant change, for example, in terms of requiring systems upgrades to differentiate between different technologies in different Distribution Cabinets (assuming installed equipment is not replaced) and requiring field force training to install the new technology and maintain both types of technology.

607. Under Option 1 (the lines-based approach) if voice and broadband are provided by different parties over the same line, then the line would be allocated to the

party who will be paying Telecom (Chorus) a monthly Charge for the line once the New Distribution Cabinet is commissioned[268], for the purposes of the Market Share Assessment. The Commission understands that under the industry agreed TCF Customer Transfer Procedures[269] there will only ever be one party that is paying Telecom (Chorus) a monthly charge for a line at any point in time.

608. The Commission considers that the advantages of Option 1 are simplicity and that it incentivises migration to more long-term efficient solutions, e.g., equipment that can serve a higher number of customers per Rack Unit and equipment which uses a single port per line. The disadvantages are that:

- where voice (either POTS or VOIP) and broadband are to be provided by different parties, the party that will be paying Telecom (Chorus) a monthly Charge for the line once the New Distribution Cabinet is commissioned would get the market share (historically this has generally been the party providing POTS), which could be perceived to disadvantage the other party (which historically has been the party providing broadband); and

- parties that use multi-port solutions (such as a port for broadband and a port for voice emulation) may be disadvantaged where space is contested.

609. Under Option 2 (the mixed lines and services-based approach lines-based approach) if multiple services, such as voice and broadband, are provided by different parties, then the line would be allocated to each of the parties in proportion to the number of services they provide, for the purposes of the Market Share Assessment. The Commission considers that the advantage of Option 2 is that it recognises separately value of voice and broadband services, and balances between lines-based and services-based approaches. The disadvantages of this approach are:

- complexity involved in splitting Market Share where one party provides broadband services and another provides voice services;

- shares of a line may not be of equal value if more than two services are provided over a line (unless services are limited to voice and broadband); and

- services such as television and alarm systems would not be valued if the definition of services were limited.

610. Option 3 is a services-based approach with voice services counting separately towards Market Share only where it requires a separate port. The advantages of this approach are that it guarantees Telecom's existing customers continue to be served where space is contested, based on Telecom's approach to PSTN voice

[268] Separate provision is made in clause 15.2.5(b) of the Sub-loop Co-location Operations Manual for New Distribution Cabinets that will serve a new area where no lines are currently being used, e.g., a new residential development, including in established living areas. In these circumstances, the Market Share of any of Telecom, the Access Seeker or any Other Service Providers will be based on that party's Market Share of Exchange-based Lines that each party is currently paying Telecom a monthly charge for, at the Exchange that the New Distribution Cabinet will be subtended from.

[269] See http://www.tcf.org.nz/content/2be38e66-1b2e-4e6f-a6e4-98f8d156f36e.html for details of these Customer Transfer Procedures.

emulation, and that it values both voice and broadband services (including where provided by different providers using different ports), as they count separately towards Market Share. The disadvantages of this approach are:

- complexity and arguable inconsistency involved in separating situations where voice service requires an additional port from those where voice service does not require an additional port; and
- it does not encourage migration to long-term efficient single-port solutions, such as VOIP.

611. Option 4 is a services-based approach under which if multiple services, such as voice and broadband, are provided to an End User, then each service would count for the purposes of the Market Share Assessment. The advantages of this approach are that it values all services offered equally, i.e., where 'voice' and 'broadband' provided by different parties, both would get market share. It also does not promote inefficient use of bonded lines. The disadvantage are that it may not reward parties for using space-efficient technology (such as a single port for voice and broadband) and that it may be complex to define different services in a workable manner.

612. The Commission has determined that the lines-based approach to the Market Share Assessment process is the most appropriate approach for the backstop rules, as this is the easiest option to implement and will over the longer term incentivise the migration to more long-term efficient solutions for the use of space which is likely to best give effect to section 18 of the Act.

613. The Commission notes Telecom (Group)'s proposal for allowance within the Market Share Assessment for situations where an additional port is required on a DSLAM for voice services provided by emulation. The Commission is not convinced that there will be disproportionate impacts on the space allocated to any party from adopting the lines-based approach, compared to Telecom (Group)'s proposal, and notes that any issues that arise in this regard can be addressed through any review process conducted by the Commission under section 30R of the Act. The Commission also notes that where all parties in a cabinet choose the same approach to serving voice customers, e.g., PSTN voice emulation, assuming all parties have the same proportions of broadband only customers and voice and broadband customers, then the outcomes of the lines-based approach should not differ significantly to the outcomes of Telecom (Group)'s proposed approach.

614. The Commission notes that the Market Share Assessment process, and other aspects of the space allocation rules, will need to apply in practice to both Telecom (Wholesale) and any commercially co-located parties.

615. As discussed in paragraphs 28 to 36, while Telecom (Wholesale) may not seek access to this STD under section 30S of the Act, Telecom can still provide itself with the service, and do so consistently with all terms and conditions in this STD through the application of the following principles:

- standard access principle 3 under subpart 1 of Part 1 of Schedule 1 of the Act; and
- equivalence of inputs (EOI, as defined in 1.2 of the Separation Undertakings) once implemented for the Sub-loop Services.

616. In relation to commercially co-located parties, the Commission has inserted clause 15.1.6, which imposes obligations on Telecom, as the Access Provider, to use all reasonable commercial endeavours to ensure equivalent obligations and/or procedures apply in respect of any commercial co-location arrangements Telecom has with Other Service Providers that are not Access Seekers for the purposes of the Sub-loop Co-location Service.

617. The Commission considers that the approach outlined in paragraphs 615 and 616 will allow for the Market Share Assessment process, and other aspects of the space allocation rules, to apply in practice to both Telecom (Wholesale) and any commercially co-located parties. The Commission considers that this approach is likely to best give effect to section 18 of the Act by promoting the efficient allocation of space for co-location in New Distribution Cabinets.

618. The Commission intends to monitor the operation of the space allocation provisions and will consider commencing a review under section 30R of the Act at any or all of the following times:

- following the first instance of a Market Share Assessment process occurring, if monitoring or industry feedback indicates any issues arose during the Market Share Assessment process;
- upon any issues arising during a subsequent Market Share Assessment process within the first twelve months after the STD has been in force, if monitoring or industry feedback suggests a review would be appropriate;
- following the first instance of an Access Seeker requesting any of the Installed Distribution Cabinet space review processes occur, if monitoring or industry feedback indicates any issues arose during that process;
- upon any issues arising during a subsequent Installed Distribution Cabinet space review process within the first twelve months after the STD has been in force, if monitoring or industry feedback suggests a review would be appropriate; and
- after the STD has been in force for twelve months, so long as at least one Market Share Assessment process or Installed Distribution Cabinet space review process has occurred.

619. Irrespective of which of the above events (if any) triggers the review, the Commission intends that any such review will consider the operation of the full package of space allocation rules, including, but not limited to, the Market Share Assessment process, its interaction with the configuration testing provisions under section 42 of the Sub-loop Co-location Operations Manual, the Installed Distribution Cabinet space review processes, and the operation of both the bi-

lateral and multi-lateral negotiations process[270] under section 15 of the Sub-loop Co-location Operations Manual. Other issues, such as the impact of the Commission's decision not to provide for rationalisation of Installed Distribution Cabinets and the operation of provisions relating to the re-allocation of space and the submission of Modified Preliminary Orders[271], may also be included within the scope of the review, if monitoring or industry feedback indicates that there are significant issues with the operation of other elements of the package of space allocation rules.

Discussion of sharing of information during the negotiations process at the space allocation workshop

620. At the space allocation workshop, the Commission asked parties to comment on whether there were any barriers to the use of market share information[272]during the Market Share Assessment process where there are contested claims for space in cabinets (such as the information disclosure provisions set out in the Operational Separation Undertakings). The key issue discussed was to what extent should any confidential information needed to undertake a Market Share Assessment, or the results of a Market Share Assessment, be shared with other parties, and what protections are appropriate for that information.

621. Telecom (Chorus) noted that there were options for handling Customer Confidential Information under the Operational Separation Undertakings, for example, where a service provider consents to disclosure of information then Telecom (Wholesale) could disclose Customer Confidential Information to Chorus for the purpose of assisting Chorus to verify data during the Market Share Assessment.[273] Alternatively, Telecom (Chorus) noted that the definition of Customer Confidential Information allows Telecom and the Commission to agree in writing what information is not "Customer Confidential Information".[274] Telecom (Chorus) also noted that it was concerned to ensure that it did not impose obligations on its customers that they were not comfortable with in relation to any process for verification of Customer Confidential Information.[275]

622. TelstraClear and Vodafone noted as alternative approaches that each party could supply market share data to the Commission or TCF, who would decide space allocation based on the confidential market share data provided by each party.[276] Telecom (Chorus) also referred to the possibility of the TCF having a role but on

[270] Any such review will consider not only the negotiations over the allocation of space in New Distribution Cabinets, but also negotiations over alternative options such as the building of additional capacity in Pedestals. See paragraphs 616 and 619 below.
[271] See paragraphs 636 to 643 below.
[272] Letter from Commission to Interested Parties, *Sub-loop Services Standard Terms Determination – Space workshop on 31 March 2009: Matters for discussion*, 27 March 2009, page 4, paragraph 15(e).
[273] Commerce Commission, *Transcript of Space Allocation Workshop*, 31 March 2009, p 27.
[274] ibid, p 27. Note also that clause 1.1 of the Operational Separation Undertakings. The definition of Customer Confidential Information provides that Customer Confidential Information does not include "any information, or types of information, that Telecom and the Commission agree in writing is not Customer Confidential Information."
[275] Commerce Commission, *Transcript of Space Allocation Workshop*, 31 March 2009, p 27.
[276] ibid, p 27.

a consensual basis, although noted that this had not been considered by Chorus.[277]

623. Telecom (Chorus) did not support the Commission having the primary role in determining market share noting a potential jurisdictional issue.[278] Telecom (Chorus) was confident that they would be able to protect any market share data whilst dealing with orders on a preliminary basis, however it considered that a process involving the Commission could be useful as a backstop.[279] Alternatively, Telecom (Chorus) proposed that any party that did not provide the required information could have their Preliminary Order rejected.[280]

624. Vodafone stated that they would agree to appropriate disclosure of Vodafone information from Telecom (Wholesale) to Telecom (Chorus).[281]

Commission decisions regarding sharing of information during the negotiations process

625. The Commission appreciates that there is some sensitivity around the exchange of market share information during the Market Share Assessment process, especially in the absence of any precedent for sharing of confidential data amongst Access Seekers in similar circumstances (e.g., during the process for unbundling of exchanges). Where space is contested, the Commission recognises that Telecom and Access Seekers may need to share confidential data about the content of preliminary orders and actual and expected customer numbers that will be receiving services from the Distribution Cabinet.

626. The Commission has determined that specific terms restricting or mandating how market share data should be handled during bilateral or multilateral negotiations for space allocation are not required. The Commission's expectation is that parties will handle confidential information in accordance with usual commercial practices and will comply with any applicable law or any other legally binding obligations during the negotiation process. The Commission does not consider that it would be efficient to create an additional process for the sharing of confidential information, and that doing so may create uncertainty.

627. However, the Commission considers that Telecom (Chorus) may need to validate data that it receives from Access Seekers before allocating Rack Units, following either successfully negotiated outcomes or under the Market Share Assessment process under clause 15.2.4 of the Sub-loop Co-location Operations Manual. To allow for this, the Commission has provided in clause 15.2.4(c) that Telecom may validate the data before allocating Available Rack Units, subject to complying with relevant requirements of the Sub-loop Services Terms, the Operational Separation Undertakings or any other applicable obligation.

628. The Commission wishes to reinforce that Telecom must comply with the Undertakings in the context of delivery of the Sub-loop Services under this Sub-

[277] Commerce Commission, *Transcript of Space Allocation Workshop*, 31 March 2009, p 28.
[278] ibid, p 28.
[279] ibid, p 29
[280] ibid, p 29.
[281] ibid, p 27.

loop Services STD. Therefore, it follows that validation of data (including obtaining any necessary consents from access seekers allowing disclosure) must be carried out consistently with any requirements of the Operational Separation Undertakings.

Submissions on rounding in the revised space allocation provisions

629. Covec submitted that:[282]

> Rounding will almost always be necessary because market shares will not generally divide evenly by the number of indivisible rack-units in a cabinet.
>
> … applying natural rounding seems most appropriate. However, this may result in an over- or under-allocation of space. … We therefore propose that any excess allocation due to rounding should be taken away from the access seeker with the largest market share in a cabinet.
>
> … We therefore propose that any under-allocation due to rounding be given to the access seeker with the largest market share in a cabinet.

630. Vodafone supported the Covec submission as being a sensible proposal for over and under-allocation rules.[283]

631. Orcon submitted that:[284]

> It is our view that if an Access Seeker's market share results in an allocation of less than 3 rack units, it should be rounded up to 3 RU, and the other shares rounded accordingly.
>
> … An ideal rule for rounding should mean providers with a small market share have their allocation rounded up, while providers with a large market share are rounded down.

632. Telecom (Group) submitted:[285]

> … Telecom holds the view that market share should be rounded to the nearest Rack Unit. However, rounding market share to a Rack Unit does not address the varying DSLAM form-factors (port-densities, air-flow gaps etc) that parties wish to deploy. Telecom has considered this issue and concludes that this variability is best dealt with in negotiations and cannot be prescribed in the market share allocation process.

633. Telecom (Group) cross-submitted:[286]

> Where rounding errors over-allocate, some parties submit that the Access Seeker with the largest allocation should be the one to give up a RU.

---

[282] Covec, *Submission on Additional Consultation on Sub-loop Backhaul and Cabinet Space Allocation*, 27 February 2009, page 7.
[283] Vodafone, *Sub-loop STD: Further Consultation – Response to Questions*, 2 March 2009, page 5.
[284] Orcon, *Untitled letter to Commission*, 2 March 2009, pages 2-3.
[285] Telecom (Group), *Sub-loop Services Standard Terms Determination: Submission on Sub-loop Backhaul and Sub-loop Co-location Further Consultation Papers,* 2 March 2009, page 21, paras 92 and 93.
[286] Telecom (Group), *Sub-loop Services Standard Terms Determination: Cross-Submission on Sub-loop Backhaul and Sub-loop Co-location Submissions on Further Consultation Papers*, 20 March 2009, page 15, paras 70-73.

> … rounding needs to be cognisant of DSLAM capability and customer base. It may be that a party can serve its customer base with less RUs than it has been allocated under the market share allocation methodology. This again points to, and supports, a negotiated outcome.

634. The Commission presented a number of options for back-stop rounding rules at the space allocation workshop.[287] At the workshop there was general consensus[288] that rounding was unlikely to be needed as the negotiation process should be effective in most instances in achieving an agreed outcome, however, there was also industry agreement that some form of rounding rules were needed as backstop, where the negotiation process was unsuccessful. There was consensus amongst industry participants at the workshop for any under-allocation to go to the party closest to being rounded up to an additional Rack Unit, and any over-allocation to be removed from the party that has been rounded up the most.

Commission decisions regarding rounding in the revised space allocation provisions

635. The Commission considers that the approach described in paragraph 634, whereby any under-allocation will go to the party closest to being rounded up to an additional Rack Unit and any over-allocation will be removed from the party that has been rounded up the most, is likely to be the most efficient approach and will simplify the rounding process. The Commission has therefore reflected this approach in the revised space allocation rules.

Submissions on re-allocation of unused space (in the revised space allocation provisions)

636. Telecom (Chorus) raised the issue of re-allocation of unused space in its submission, stating that:[289]

> … DSLAM equipment is fixed in sizes and cannot be easily or smoothly scaled to the space allocated by market share. It is not clear how the Commission process will reallocate space that is offered through the market share assessment but not taken up, or taken up but not used. For example, if Customer 1 has 30% market share, but only requires 25% of space for its DSLAM, can that customer retain the extra 5% of space or is it reallocated, and if so, how?

637. Telecom (Chorus) also cross-submitted, in the context of their proposal for greater emphasis to be given to negotiated outcomes, that:[290]

> Following the market share assessment, customers will submit new orders. This is likely to result in unused space either because customers cannot scale their equipment to their market share of space, or because one or more customers decide not to proceed with their order. The process requires a separate step to reallocate this unused space to ensure that space is as efficiently used as possible. We believe the best way is to allow us to work with our customers that need this additional space to ensure it is reallocated in the most efficient and flexible manner.

---

[287] Letter from Commission to Interested Parties, *Sub-loop Services Standard Terms Determination – Space workshop on 31 March 2009: Matters for discussion*, 27 March 2009, page 7, paragraph 26.
[288] Commerce Commission, *Transcript of Space Allocation Workshop,* 31 March 2009, pages 51-59.
[289] Telecom (Chorus), *Submission on Commission's Sub-loop Services Further Consultation Document*, 2 March 2009, page 9, para 51.
[290] Telecom (Chorus), *Cross-submission on Commission's Sub-loop Services Further Consultation Document*, 20 March 2009, page 6, paragraph 21.

638. Telecom (Group) cross-submitted that:[291]

> We expect that any party who needs less space than they are allocated on a market share assessment basis would make it available as part of good faith negotiations where there is a space constraint. We consider that the negotiation period is the appropriate mechanism to address this issue.

639. At the space allocation workshop the Commission presented a number of questions regarding re-allocation of unused space. There was general consensus amongst industry participants:[292]

- supporting re-allocation of space allocated to any Party above that Party's Preliminary Order and when any Preliminary Order is withdrawn, rejected or deemed to be rejected;
- that consequentially there needed to be opportunities for parties to revise their Preliminary Orders where orders are withdrawn, in order to reflect changed circumstances such as the party withdrawing their Preliminary Order and , in turn, requesting Services be provided by another Party, and the latter Party therefore needing additional space allocation to do so; and
- that the potential additional time needed for the submission and processing of Revised Preliminary Orders meant that it was appropriate for the First Assessment Date to be two weeks earlier than originally provided.

Commission decisions regarding re-allocation of unused space (in the revised space allocation provisions)

640. The Commission has determined that the approach described in paragraph 639 should apply, whereby re-allocation of space can occur and there are opportunities for the revision of Preliminary Orders where one Party's Preliminary Order has been withdrawn. The Commission considers that this represents an approach that is likely to give best effect to section 18 of the Act, and is likely to lead to the efficient use of space.

641. The Commission has reflected this approach in the revised space allocation rules by limiting parties' allocations under the Market Share Assessment process to their Preliminary Order and by allowing for re-allocation of space in those circumstances and where a Party's Order is rejected or deemed to be rejected, using the concepts of allocation of Excess Allocation and submission of Modified Preliminary Orders.

642. The Commission has also, as discussed further in paragraphs 657 and 658 below, determined that the First Assessment Date should be two weeks earlier than previously provided for, in order to take into account the potential timeframes for re-allocation of space and the submission of Modified Preliminary Orders. The Commission expects that where there is no need for re-allocation of space or the submission of Modified Preliminary Orders, that New

[291] Telecom (Group), *Sub-loop Services Standard Terms Determination: Cross-Submission on Sub-loop Backhaul and Sub-loop Co-location Submissions on Further Consultation Papers*, 20 March 2009, page 16, paragraphs 75 and 76.
[292] Commerce Commission, *Transcript of Space Allocation Workshop,* 31 March 2009, pages 45-51.

Distribution Cabinets will therefore be able to be Installed and operational two weeks earlier than the scheduled installation date.

643. The Commission intends to monitor the timeframes for the installation of New Distribution Cabinets, and seek industry feedback on whether there are any significant issues, in relation to the re-allocation of space and the submission of Modified Preliminary Orders. If any issues arise, then these can be considered within the scope of any review discussed at paragraphs 618 and 619, regarding the operation of the package of space allocation rules.

Submissions on making allowance for growth in market share (in the revised space allocation provisions)

644. Covec submitted that:[293]

> A potentially more efficient approach [than the current backward looking approach] could be to make the market share assessment 'forward looking' by basing it to some extent on a forecast of market shares. It should be possible to look at the recent history (say over the past six months) of changes in market shares in a given location. If market shares have been changing greatly (e.g. more than +/- 10% or 15% over six months), a growth or contraction factor could be added to or subtracted from the allocation implied by the current market shares. This would reduce the likelihood that the market share assessment would constrain operators from competing for market share."

645. Vodafone submitted that:[294]

> While market shares could be assessed simply on the number of lines in use at the assessment time, it may be better to base the assessment on the trend since the last assessment. This would reduce the chances of the assessment constraining Access Seekers prior to the next assessment.

646. Telecom (Chorus) cross-submitted that:[295]

> Any forward looking method for assessing market share is reliant on the accuracy of the forecast or trend as a predictor of future market share activity. Forecasts since the inception of UCLL MPF service have been approximately 70% accurate. There is a real risk that either these forecasts or past trends may inaccurately predict market share and market growth, and consequently misallocate actual space needs.
>
> …further complicating the market share assessment by the addition of any projected future view will reduce the accuracy of the market share, and result in likely over-allocations of space to new entrants, potentially squeezing other cabinet tenants without good reason.

647. Telecom (Group) cross-submitted:[296]

> We do not consider that Covec's suggestion of forward looking forecasting is workable. … Such forecasts are also necessarily built on a number of assumptions and are therefore unlikely to be accurate.

---

[293] Covec, *Submission on Additional Consultation on Sub-loop Backhaul and Cabinet Space Allocation*, 27 February 2009, pages 6-7.
[294] Vodafone, *Sub-loop STD: Further Consultation – Response to Questions*, 2 March 2009, page 4.
[295] Telecom (Chorus), *Cross-submission on Commission's Sub-loop Services Further Consultation Document*, 20 March 2009, page 3-4, paras 9 and 12.
[296] Telecom (Group), *Sub-loop Services Standard Terms Determination: Submission on Sub-loop Backhaul and Sub-loop Co-location Further Consultation Papers,* 2 March 2009, pages 16-17, paragraphs 83, 84 and 86.

> The only accurate information that all parties are likely to agree upon is a current snapshot prior to cabinet migration as it is based on objective evidence. … We have previously submitted that there should be reasonable growth for all Access Seekers, provided it does not take priority over ensuring all Access Seekers are able to install equipment they would normally use to support their current customers. Reasonable growth should not be at the expense of requiring the relinquishment of customers/end users or preventing Telecom from fulfilling its regulatory obligations.

648. At the space allocation workshop the Commission presented a question about how growth in Market Share could be calculated and whether there were any additional issues relating to data use or data protection.[297]

649. Vodafone clarified at the workshop that they (and Covec on their behalf) were proposing that any allowance for growth would need to be based on actual time-series trends of growth, rather than Access Seekers' forecasts of possible future growth. Vodafone stated that:[298]

> trends and growth as opposed to optimistic access seeker forecasts … are important in a sense because access seekers have come at some point in the past from a 0 base and are growing and progressively eating into Telecom's retail or wholesale market share. So if there's no growth allowance it will always disadvantage the new access seekers.

650. Telecom (Group) and Telecom (Chorus) raised concerns at the workshop about whether the data necessary to calculate growth in Market Share would be available in the form and at the time needed, and indicated that they considered that growth in Market Share could be accommodated in negotiations over the allocation of space in New Distribution Cabinets and over alternative options such as the building of additional capacity in Pedestals.[299]

651. Vodafone accepted that (within the context of the option being discussed at the workshop in relation to rounding) alternatives to growth in Market Share may be more pragmatic options, but were clear at a principled level (as noted in paragraph 649 above) that they considered not generally taking growth in Market Share into account could disadvantage Access Seekers.

Commission decisions regarding making allowance for growth in market share (in the revised space allocation provisions)

652. The Commission considers that the opportunity for negotiations over space allocation under section 15, including the opportunity to discuss the building of additional capacity in Pedestals, should provide all Parties with the opportunity to consider the costs and benefits of allowing for their forecast growth in Market Share. Parties will therefore have incentives, for example, where it is cost efficient, to reach an agreement about the building of additional capacity in Pedestals.

---

[297] Letter from Commission to Interested Parties, *Sub-loop Services Standard Terms Determination – Space workshop on 31 March 2009: Matters for discussion*, 27 March 2009, page 7, paragraph 26b.
[298] Commerce Commission, *Transcript of Space Allocation Workshop,* 31 March 2009, page 55, comment by David Diprose.
[299] ibid, pages 55-59, comments by Chris Dyhrberg, Sean Mosby, John Wesley-Smith and Brendan Dempsey.

653. The Commission recognises that taking trend growth in Market Share into account could result in dynamic efficiency benefits, by encouraging ongoing growth opportunities for those parties that have demonstrated their ability to grow their market share. However, the Commission is not convinced that taking trend growth in Market Share into account will be in the long-term benefit of End Users, given the opportunities available during negotiations and emerging options for addressing space constraints (such as use of hardened DSLAMs), and does not consider that the potential additional costs involved in assessing trend growth in Market Share are justified.

654. The Commission intends to monitor the operation of the provisions regarding the negotiations over the allocation of space in New Distribution Cabinets and over alternative options such as the building of additional capacity in Pedestals, and to seek industry feedback on whether there are any significant issues in relation to these negotiations. If any issues arise, then these can be considered within the scope of the review discussed at paragraphs 618 and 619, regarding the operation of the package of space allocation rules.

Submissions on timing issues related to the revised space allocation provisions

655. Telecom (Chorus) initially submitted that where any equipment requiring configuration testing was part of a Preliminary Order, then "any customer taking part in a negotiation must deliver their equipment to Eaton for testing within five Working Days of receiving notification from Chorus of an untested configuration."[300]

656. Telecom (Chorus) also submitted:[301]

> In order for the cabinet manufacturer to install customer equipment in the factory as part of the Distribution Cabinet build process, we have also included a requirement for customers who accept such a quote to provide the specific equipment relating to the quote to the cabinet manufacturer within five Working Days of acceptance.
>
> However, to ensure that Eaton receives equipment in time to install it under the cabinet build plan, we have included a 'hard stop', so that equipment relating to an accepted quote must be sent to Eaton no later than eight Working Days after Chorus has issued a quote.

657. Telecom (Chorus) subsequently proposed, and there was general support from Access Seekers and Telecom (Group),[302] in light of the proposals discussed at the space allocation workshop, that the First Assessment Date needed to be two weeks earlier, to allow for any iterations that were needed in the space allocation process due to negotiations, re-allocation, the Market Share Assessment Process and any configuration testing.

[300] Telecom (Chorus), *Submission on Commission's Sub-loop Services Further Consultation Document*, 2 March 2009, page 6, paragraph 29.
[301] ibid, page 7, paragraphs 40-41.
[302] Commerce Commission, *Transcript of Space Allocation Workshop,* 31 March 2009, pages 49-51.

Commission decisions regarding timing issues related to the revised space allocation provisions

658. The Commission has determined that the changes proposed by Telecom (Chorus) in paragraphs 655 to 657 to allow for configuration testing and any iterations that are needed in the space allocation process are reasonable and has reflected these changes in the revised space allocation rules (in combination with the additional matters proposed for inclusion in the negotiation process by Telecom (Chorus), as described in paragraph 589). As a consequence of these changes to timing issues, for example, providing for the First Assessment Date to be two weeks earlier, the Commission has made amendments using alternative wording to that proposed by Telecom (Chorus).

Submissions on the "Use-it-or-Lose-it" Policy and the absence of rationalisation provisions in the revised space allocation provisions

659. Telecom (Chorus) submitted that:[303]

> (a) It would not be appropriate to allow "Application of the "Use it or Lose it" policy in a situation where the Distribution Cabinet has not yet been installed …"; and
>
> (b) Telecom (Chorus)'s customers may prefer a shorter timeframe than the six months provided for equipment to be used before the "Use-it-or-Lose-it" policy could be invoked, and noted that the policy could be invoked again once the "Use-it-or-Lose-it" period had passed.

660. Telecom (Chorus) also noted that:[304]

> … a similar rule applies in section 15.5.2 of the UCLL Co-location Operations Manual, but that the applicable time in that case is six months. We believe that in the context of the Sub-loop Services, where space restrictions may be more common than in the case of UCLL Co-location, three months is a more appropriate grace period to begin using space in the cabinet than six months.

661. Telecom (Group) submitted that:[305]

> … the revised set of rules better reflects the original TCF agreement, but also benefits from the submissions that have occurred since the industry's initial high-level agreement. In particular, we support the removal of … rationalisation …

662. Telecom (Group) cross-submitted that:[306]

> [it supports] changes to strengthen the "use it or lose it" rule by reducing the relevant timeframe from six to three months. However, we continue to believe that any form of rationalisation will, amongst other things, lead to complexity, inefficiency, and uncertainty, and that rationalisation also is inconsistent with section 18 of the Act if it requires any Access Seeker to shed customers.

---

[303] Telecom (Chorus), *Submission on Commission's Sub-loop Services Further Consultation Document*, 2 March 2009, pages 9-10, paragraphs 56-58.
[304] ibid, page 10, paragraph 59.
[305] Telecom (Group), *Sub-loop Services Standard Terms Determination – Submission on Sub-loop Backhaul and Sub-loop Co-location Further Consultation Papers*, 2 March 2009, page 20, paragraph 83.
[306] Telecom (Group), *Sub-loop Services Standard Terms Determination: Cross-Submission on Sub-loop Backhaul and Sub-loop Co-location Submissions on Further Consultation Papers*, 20 March 2009, page 5, paragraph 17, and page 18, paragraph 94.

> Rationalisation is likely to only be required in a relatively small number of cabinets and is a costly option. The better approach is for an Access Seeker to request or build additional capacity, for example, by way of a pedestal and to strengthen the "use it or lose it rule" as set out above.

663. Covec submitted that:

> … rationalisation should be retained together with the market share assessment for installed cabinets, but have it apply only if relatively large changes in the number of end users served by each operator in a cabinet have occurred. That is, rationalisation would only be applied if a significant change in market shares had occurred, so that the costs of rationalisation were presumed to be offset by the competition benefits facilitated by it.
>
> … Additionally, the proposed use it or lose it rule is very weak. Equipment in a cabinet is considered to be 'in use' if it has been used to support at least one end user over the preceding six months. Considering the fact that Telecom Wholesale will have a large initial space allocation in most or all cabinets, our concern is that this weak rule could slow down entry or restrict competition by making it difficult for other access seekers to compete for the space allocated to Telecom Wholesale. One possibility to strengthen the rule is to make the assessment period shorter for equipment that is not currently in use. For example, equipment could be deemed to be in use if it is currently serving at least one end user, or if not, if it has been used to serve at least one end user during the past two or three months.

664. Telecom (Chorus) cross-submitted, in response to Covec, that:[307]

> … it is important to note that application of the use-it-or-lose-it rule is not the only means of creating space for an entrant's equipment where space in the cabinet is constrained; a new entrant can also collocate in an associated pedestal. … Where a cabinet is legitimately full and use-it-or-lose-it cannot be applied, we consider that a pedestal build is the better option for both the existing customers and the entrant.

665. Vodafone submitted that:

> Less satisfactory is the Commission's approach to space allocation in installed cabinets, especially given that the proposed "use it or lose it" rule is effectively toothless. An Access Seeker taking up 60% of the available space would be considered to be using it if they had a single working customer at some stage within the past 6 months. This rule should either be changed to link the number of working customers to the amount of space used, or be linked to a market share assessment.
>
> Vodafone's view is that equipment rationalisation should only be required where there has been a significant change in market share, to avoid unnecessary or overly-frequent expense.

666. Telecom (Chorus) cross-submitted, in response to Vodafone, that:[308]

> … [it did] not support Vodafone's suggestion that use-it-or-lose-it should factor in space used or a market share assessment, because these are separate options the Access Seeker may request.

667. TelstraClear supported the proposals in the Commission's revised space allocation provisions, as set out in paragraph 579 above.

---

[307] Telecom (Chorus), *Cross-submission on Commission's Sub-loop Services Further Consultation Document*, 20 March 2009, page 5, paragraph 14.
[308] ibid, page 5, paragraph 17.

Commission decisions regarding the "use-it-or-lose-it" policy and the absence of rationalisation provisions in the revised space allocation provisions

668. The Commission has determined that the period that applies for the "use-it-or-lose-it" policy should be reduced from six month to three months. The Commission notes that a reduced period was supported by Covec and Telecom (Group). The Commission also agrees with Telecom (Chorus)'s submissions that the potential for space constraint is higher than in a Local Exchange, and considers that the consequences of space constraint are significant enough to justify a shorter "use-it-or-lose-it" period, i.e., three months. This approach will incentivise more efficient use of the space in Distribution Cabinets and will disincentivise inefficient use of space that may constrain other Parties from entering a Distribution Cabinet.

669. The Commission has made amendments to the "use-it-or-lose-it" policy using its own wording, rather than the alternative wording that was proposed by Telecom (Chorus). Under the approach adopted by the Commission, this provision will only come into effect when a Party has installed equipment in a Distribution Cabinet that is, or will within the next three months be, supplying services, or supporting services that are supplied, to at least one End User via a Sub-loop MPF. The Commission considers that this drafting will allow for greater efficiencies in the installation of equipment, as Parties will be more confident in installing equipment that will shortly be in use, knowing that they will not be required to remove it if the "use-it-or-lose-it" policy is applied.

670. The Commission notes that under the revised space allocation provisions, application of the "use-it-or-lose-it" policy is one of a number of options available to Access Seekers where there is insufficient space in an Installed Distribution Cabinet, in conjunction with rearrangement of existing equipment and commercial negotiations.[309]

671. The Commission does not consider the proposals by Covec or Vodafone to retain some form of rationalisation, or to link the "use-it-or-lose-it" policy to some form of an efficient use requirement, would be likely to best give effect to section 18 of the Act. The Commission reiterates that following the Sub-loop Services Conference it removed the provision for rationalisation and the efficient use requirement, in response to concerns that it would inefficiently lead to significant excessive costs without clear long term benefits to End Users, and it has not been presented with any evidence that would suggest rationalisation or efficient use requirements should be reinstated.

672. The Commission intends to monitor the operation of any Installed Distribution Cabinet space review processes, and seek industry feedback on whether there are any significant issues, in relation to these review processes. If any issues arise, then these can be considered within the scope of the review discussed at paragraphs 618 and 619, regarding the operation of the package of space allocation rules.

[309] See above paragraph 579 for discussion of the potential outcomes of a negotiation process in relation to an Installed Distribution Cabinet.

Submissions that a minimum space allocation should be included in the revised space allocation provisions

673. Orcon submitted that:[310]

> there must be a minimum space allocation for a market entrant or competitor to Telecom. It is our view that if an Access Seeker's market share results in an allocation of less than 3 rack units, it should be rounded up to 3 RU, and the other shares rounded accordingly.

674. Telecom (Group) cross-submitted, that:[311]

> … [it] does not support a rule for requiring a minimum rack unit allocation if a possible outcome of these rules is that it requires rationalisation in the form of shedding customers or end users.

Commission decisions regarding a minimum space allocation

675. The Commission does not consider that a minimum space allocation is appropriate. Given the Commission's decisions above not to provide for rationalisation of Installed Distribution Cabinet, a minimum space allocation would be applicable only where a Market Share Assessment process was occurring. Any minimum allocation would inefficiently inflate the space allocated to some Access Seekers, above that justified by their Market Share, and reduce the space allocated to other Access Seekers and / or Telecom, below that justified by their Market Share.

676. The Commission notes also that the proposal for minimum space allocation raises similar issues to those discussed in relation to trends in Market Share growth, in paragraphs 644 to 654 above, regarding forward-looking forecasts of space requirements. The Commission has decided above not to take trend growth in Market Share into account in allocating space under the Market Share Assessment process.

677. The Commission considers that the opportunity for negotiations over space allocation under section 15, including the opportunity to discuss the building of additional capacity in Pedestals, should provide all Parties with the opportunity to consider the costs and benefits of proceeding with any request for a minimum space allocation.

Residual issues

678. Orcon submitted that:[312]

> The regulated Sub-loop backhaul service should also allow for Access Seekers to share collocation and backhaul services and separate the service at the exchange to each Access Seeker's separate equipment, without additional charges. This would allow for shared cabinet equipment and more efficient use of backhaul links. This is a realistic way in which

[310] Orcon, *Untitled letter to Commission*, 2 March 2009, page 2.
[311] Telecom (Group), *Sub-loop Services Standard Terms Determination: Cross-Submission on Sub-loop Backhaul and Sub-loop Co-location Submissions on Further Consultation Papers*, 20 March 2009, page 5, paragraph 17.
[312] Orcon, *Untitled letter to Commission*, 2 March 2009, page 3.

> Sub-loop can be implemented in an affordable manner that would encourage competition for the benefit of end-users.

679. Vodafone submitted that:[313]

> The regulated Sub-loop backhaul service should also allow for Access Seekers to share backhaul and cabinet equipment, and separate the service at the exchange to each Access Seeker's separate equipment, without cost penalty. This is a realistic way in which Sub-loop can be implemented in an affordable manner.

680. Telecom (Chorus) cross-submitted that:[314]

> … Access Seekers may wish to purchase sub-loop services on the 'secondary market' rather than directly from us. Given the economics of sub-loop, this is a logical scenario. We do not agree, however, that Access Seekers should or can jointly purchase the regulated sub-loop services from us. It would unnecessarily complicate the relationship between Chorus and the Access Seekers involved (including billing, faults, notifications, penalties, etc) and is not contemplated by the Act. We also do not agree with Orcon's assertion that we should provide an unregulated service (separating a shared backhaul service) at no extra cost. Also given the space constraint expected in a cabinet the requirement for additional space for Chorus equipment to combine multiple customers backhaul services into one is undesirable and the cost of the equipment is likely to outweigh any saving.
>
> However, given the ability of Access Seekers to buy and sell on, and co-ordinate their sub-loop purchases through, the secondary market, we think our customers can achieve the benefits of concentrating their services without sharing under the STD.

681. Vodafone submitted that:[315]

> The rule whereby an Access Seeker can request that the equipment already in the cabinet be rearranged at that Access Seeker's cost is reasonable, except in the situation where another Access Seeker's equipment is unreasonably using the available space. An example of this would be where the Telecom Wholesale DSLAM is positioned in the middle of the rack. That may be understandable if the DSLAM and cabinet were installed prior to any consideration for Sub-loop unbundling, but if the cabinet is part of the current cabinetisation program then it is not reasonable for the new Access Seeker to pay for rearrangement. While gaps between equipment may be necessary for heat dissipation reasons, there should be no opportunity to take advantage of this to obstruct Access Seekers. Possibly rules around gaps around equipment would help here.

682. Telecom (Chorus) cross-submitted that:[316]

> Accommodating our customers' equipment within cabinets will be a highly technical process to meet the specific air flow, heat and space constraints of that cabinet and equipment configuration. We believe that further complicating space allocation by the addition of specific rules to deal with gaps will prove counter-productive and frustrating to all parties.

---

[313] Vodafone, *Sub-loop STD: Further Consultation – Response to Questions*, 2 March 2009, page 3.
[314] Telecom (Chorus), *Cross-submission on Commission's Sub-loop Services Further Consultation Document*, 20 March 2009, page 6, paragraphs 23-24.
[315] Vodafone, *Sub-loop STD: Further Consultation – Response to Questions*, 2 March 2009, page 4.
[316] Telecom (Chorus), *Cross-submission on Commission's Sub-loop Services Further Consultation Document*, 20 March 2009, page 6, paragraph 20.

Commission decisions regarding residual issues

683. The Commission agrees with Telecom (Chorus) that Access Seekers cannot jointly purchase the regulated Sub-loop Services, including the Sub-loop Co-location Service, as joint purchasing is not consistent with the service description provided in the Act. The Commission agrees with Telecom (Chorus) that the Sub-loop Co-location Service can be purchased by one Access Seeker and on-sold or wholesaled to another Access Seeker. The Commission notes that the wholesaling of the Sub-loop Backhaul Service is supported by the provision for Inter-Rackprint Tie Cables within the Sub-loop Co-location Service Description, whereby an Access Seeker's Rackprint in the Distribution Cabinet can be connected with another Rackprint in the Distribution Cabinet. Alternatively, an Access Seeker could purchase an end to end on-sold or wholesaled Sub-loop Service from another Access Seeker.

684. The Commission does not consider that specific rules around gaps between equipment, as proposed by Vodafone, would lead to the efficient allocation of space. The Commission considers that, as the equipment configuration testing provisions in section 42 of the Sub-loop Co-location Operations Manual will identify a range of possible configurations, it is appropriate that Telecom (Chorus) be able to select the optimal configuration based upon the Preliminary Orders it is processing at any point in time, and that Telecom (Chorus) will have incentives to maximise the opportunity for additional known equipment configurations to be installed at a later stage. This should also consequentially minimise the need for Rearrangement, and restrict the need for Rearrangement to previously unknown equipment configurations. In these circumstances, the Commission considers that it is appropriate that Access Seekers pay the costs of Rearrangement.

685. As noted in paragraph 672 above, the Commission intends to monitor the operation of any Installed Distribution Cabinet space review processes, including Rearrangement, and seek industry feedback on whether there are any significant issues, in relation to these review processes. If any issues arise, then these can be considered within the scope of the review discussed at paragraphs 616 and 619, regarding the operation of the package of space allocation rules.

General Terms

Definition of B2B – Clause 1.1

686. In the draft STD the Commission included a definition of "B2B" that specifically referred to Telecom's online ordering and tracking system, OO&T.

687. Telecom (Chorus) submitted that the definition of B2B should be descriptive of systems with particular functionality, but should not be limited to a particular Telecom system as existing today. Telecom (Chorus) noted that as part of the Undertakings, Telecom will be developing a number of new systems and, as a result, the systems which provide the relevant functionality in the future may differ from those that currently provide this functionality.[317]

688. In order to provide sufficient flexibility for future changes in Telecom's systems the Commission has removed the reference to OO&T from the definition of B2B.

Definition of Capacity – Clause 1.1

689. The Commission amended the definition of "Capacity" in the draft STD to refer to the space required for the installation of HDP block(s) and termination cables on the Distribution Cabinet DF.

690. Telecom (Chorus) submitted that in the TCF Working Party discussions, the term "capacity" was linked with several different items, including:

- copper network (both feeder and distribution);
- equipment space (both Distribution Cabinet and Pedestal);
- cable termination space (blocks);
- power supply (both DC and battery);
- heat management; and
- fibre backhaul network.[318]

691. Telecom (Chorus) therefore proposed a revised definition of capacity that captures all of these items.[319]

692. The Commission considers that such an amendment is appropriate given the variety of ways in which the term "capacity" is used, but has included alternative wording to that proposed by Telecom (Chorus) to ensure that the scope of the definition does not extend beyond the scope of the services available under this STD. For example, the Commission has not included references to the copper feeder as this asset is outside the scope of any of the Sub-loop Services.

---

[317] Telecom (Chorus), *Submission on draft standard terms determination for Telecom's sub-loop services*, 15 October 2008, p 64, para 332.
[318] ibid, p 65, para 335.
[319] ibid, para 336.

Definition of Local Exchange – Clause 1.1

693. In the draft STD the Commission inserted a definition of "Local Exchange" which referred to the relevant Exchange for any Distribution Cabinet, as set out in the Distribution Cabinet Database.

694. Telecom (Chorus) submitted that, depending on the context, the relevant Local Exchange could be either the Exchange to which the copper or the fibre is routed (the copper Exchange would relate to the routing of voice services in the medium term, whereas the fibre Exchange relates to the routing of backhaul).[320]

695. Given that the Distribution Cabinet Database (see paragraph 746) has been removed from the final STD and that the term "Local Exchange" is almost exclusively used to refer to an Exchange for the purposes of Sub-loop Backhaul, the Commission has amended this definition to refer to the Exchange where the fibre feeder is terminated for the purposes of the Sub-loop Backhaul Service. Consequential amendments have been made to clarify instances where the intended meaning is the Exchange connected to the Distribution Cabinet via a copper feeder.

Definition of Pedestal – Clause 1.1

696. Vodafone submitted that the definition of "Pedestal" should be amended so that references to it throughout the Sub-loop Services Terms can cover both a Telecom pedestal and an Access Seeker pedestal.[321]

697. In response, Telecom (Chorus) submitted that this amendment would adversely affect its customers, as it would mean that an Access Seeker's pedestal would become part of the Distribution Cabinet and subject to the STD space allocation rules.[322]

698. Given that the Sub-loop Services STD sets out provisions in relation to *Telecom's* network, the Commission has not amended the definition of "Pedestal" in accordance with the Vodafone submission.

Definition of Rack Unit – Clause 1.1

699. In the draft STD the Commission defined "Rack Unit" as a unit of space within the Sub-loop Co-location Service Area of a Distribution Cabinet (including any associated pedestal) where Access Seeker equipment or Telecom equipment can be installed.

700. Telecom (Chorus) submitted that a "Rack Unit" is an industry standard measure of distance, and suggested that this term be simply defined as "44.45

[320] Telecom (Chorus), *Submission on draft standard terms determination for Telecom's sub-loop services*, 15 October 2008, p 66, para 339.
[321] Vodafone, *Submission on the draft standard terms determination for the Sub-loop Services*, 15 October 2008, p 17.
[322] Telecom (Chorus), *Cross-submission on draft standard terms determination for Telecom's sub-loop services*, 31 October 2008, p 30, para 129.

millimetres".[323] Vodafone submitted that the original wording should be reinstated as a sole reference to 44.45 millimetres could be referring to anything and means nothing in isolation.[324]

701. In order to provide as full and precise a definition as possible the Commission has amended the definition of "Rack Unit" so that it includes (but is not replaced by) the height measurement proposed by Telecom (Chorus).

Definition of Rearrangement – Clause 1.1

702. In the draft STD, the Commission deleted paragraph (a) of the definition of Grooming, which provided for the rearrangement of DSLAMs within a Distribution Cabinet.

703. Telecom (Chorus) submitted that this former paragraph (a) should be reinstated in the General Terms as a new definition of "Rearrangement", acknowledging that this activity differs from those which are generally considered to be Grooming. Telecom (Chorus) further submitted that references to "Grooming" in the STD should be amended to "Grooming and Rearrangement".[325]

704. The Commission agrees with this submission, and has included a definition of Rearrangement in the Sub-loop Services General Terms similar to that proposed by Telecom (Chorus).

Definition of Road – Clause 1.1

705. As noted in paragraphs 712 to 714, Telecom (Chorus) submitted that the provisions regarding additional requirements in relation to land in the Sub-loop Co-location Access Terms should be reinstated in the General Terms.[326] The Commission agrees, and has moved the definition of "Road" back to the General Terms.

Other definitions – Clause 1.1

706. As a consequence of changes made throughout the Sub-loop Services Terms, the definitions of Available Rack Units, Distribution Cabinet Database, Guaranteed Occupancy Period and Rationalisation are no longer required in the General Terms and have been deleted as a result.

Insurance and liability requirements – Clause 6.6 and section 16

707. In the draft STD the Commission reduced the liability cap for the Sub-loop Co-location Service to $5 million to reflect the $5m insurance requirement. Similarly, the liability cap for the Sub-loop Backhaul Service was amended from

---

[323] Telecom (Chorus), *Submission on draft standard terms determination for Telecom's sub-loop services*, 15 October 2008, p 66, para 341.
[324] Vodafone, *Submission on draft standard terms determination for Telecom's sub-loop services*, 15 October 2008, p 12.
[325] Telecom (Chorus), *Submission on draft standard terms determination for Telecom's sub-loop services*, 15 October 2008, pp 66-67, para 345-346.
[326] ibid, p 67, paras 347-348.

$10m to $2m, with no insurance requirements, for consistency with the UCLL Backhaul STD.

708. Orcon, Kordia and CallPlus submitted that while lowering the insurance requirements from $10m to $5m for Sub-loop Co-location is a positive step, a figure of $2m is more appropriate for the reasons set out in their submission on the STP.[327]

709. In response, Telecom (Chorus) submitted that the insurance requirements must provide adequate protection for Telecom against losses it could incur in relation to the Sub-loop Co-location Service. Telecom (Chorus) submitted that given most cabinets are located in the suburbs or low density industrial areas, $5m is a reasonable requirement for public liability insurance claims.[328]

710. Vodafone cross-submitted that the insurance amounts should equate to liability limits set out in clauses 16 and 17 of the General Terms.[329]

711. As no new specific arguments have been presented for amending the insurance requirement or liability caps, the Commission has retained the approach set out in the draft STD, including a liability cap and insurance requirement of $5m for the Sub-loop Co-location Service and a liability cap for the Sub-loop Backhaul Service of $2m.

Land Occupation Arrangements – Clauses 6.8 and 6.9

712. In the draft STD the Commission moved the provisions regarding additional requirements relating to land occupation arrangements from the General Terms to the Sub-loop Co-location Access Terms and Operations Manual, on the basis that these provisions were only required for the Sub-loop Co-location Service.

713. Telecom (Chorus) submitted that these provisions should be reinstated in the General Terms as they are also required for the Sub-loop UCLL Service (in addition to the Sub-loop Co-location Service) because:

- the Sub-loop UCLL Tie Cable Service can involve the installation of Access Seeker equipment in a Distribution Cabinet; and
- if an Access Seeker requests the Sub-loop UCLL Service in a cabinet that is subject to a lease, license or easement, the Access Seeker must obtain the relevant landowner's consent.[330]

714. In light of the points raised by Telecom (Chorus) the clauses regarding additional requirements relating to land have been reinstated in General Terms, although with some amendments to ensure greater consistency with similar

[327] Orcon, Kordia and CallPlus, *Submission in response to the draft standard terms determination for the sub-loop services*, 15 October 2008, p 13, para 70.
[328] Telecom (Chorus), *Submission on draft standard terms determination for Telecom's sub-loop services*, 15 October 2008, p 31, paras 134-135.
[329] Vodafone, *Cross-submission in response to the draft standard terms determination for the sub-loop services*, 31 October 2008, p 10.
[330] Telecom (Chorus), *Submission on draft standard terms determination for Telecom's sub-loop services*, 15 October 2008, pp 67-68, para 353.

provisions set out in the Sub-loop UCLL and Sub-loop Co-location Operations Manuals.

Pre-1988 Cabinets – Clause 6.9(b)

715. Under the draft Access Terms the Sub-loop Co-location Service was not available at pre-1998 Distribution Cabinets. The Commission has moved this provision to the General Terms as it is related to the land occupation provisions referred to on paragraph 714.

716. Orcon, Kordia and CallPlus noted this provision excluded the service from being offered at a pre-1988 cabinet. Orcon, Kordia and CallPlus submitted that Sub-loop UCLL should still be considered in these locations, and Telecom or the Commission should make a decision about whether the location should be upgraded.[331]

717. The Commission remains of the view that Sub-loop Co-location is not available at pre-1988 Distribution Cabinets. The Commission considers that clause 7.2 in the Sub-loop Co-location Service Description, which prevents Telecom from discriminating between an order for additional capacity from an Access Seeker and a division of Telecom, sufficiently addresses the scenario where an Access Seeker seeks an upgrade of a pre-1988 Distribution Cabinet in order to provide capacity. Furthermore, the Sub-loop UCLL Service would still be available at these locations, provided the Access Seeker co-locates their equipment remotely.

Change Mechanism – Section 9

718. Telecom (Group) submitted that the change mechanism set out in section 9 of the General Terms should ensure that Telecom (Wholesale) is able to participate in any proposed changes to the Sub-loop Operations Manuals and Service Level Terms. Telecom (Group) noted that Telecom (Chorus) is effectively the Access Provider of the Sub-loop Services, and is limited under the Undertakings in its ability to take into account the views of Telecom (Wholesale) on proposed changes.[332]

719. In its cross-submission, Telecom (Chorus) agreed that it is essential that all of its customers, including Telecom (Wholesale), are able to participate in any proposed changes to the Sub-loop Operations Manuals and Service Level Terms. Telecom (Chorus) noted that under the draft STD, Telecom (Wholesale) can only participate in proposed changes as "Telecom" and, in practice, this makes it extremely complex to put Telecom (Wholesale) in the same position as an external customer under EOI-compliant internal trading arrangements.[333]

---

[331] Orcon, Kordia and CallPlus, *Submission in response to the draft standard terms determination for the sub-loop services*, 15 October 2008, p 19, para 107.
[332] Telecom (Group), *Sub-loop services draft STD – Submission*, 15 October 2008, p 41, paras 1-2.
[333] Telecom (Chorus), *Cross-submission on draft standard terms determination for Telecom's sub-loop services*, 31 October 2008, p 31, para 137.

720. Accordingly, Telecom (Chorus) proposed extending the definition of "Other Service Provider" to include Telecom Wholesale, and amending the change mechanism to refer to "Other Service Providers".[334]

721. Vodafone disagreed with this proposal on the basis that it considered the current change mechanism set out in clause 9 of the General Terms to be sufficient to allow all parties to contribute to the process.[335]

722. The Commission's rationale for not including Telecom business units in the definition of "Other Service Provider" is set out in paragraphs 29 to 33. Furthermore, provisions in the Operational Separation Undertakings may provide potential avenues for addressing this issue and even if this is not a viable option Telecom (Wholesale) would be able to participate in TCF discussions and provide submissions to the Commission on potential changes to the Operations Manuals or Service Level Terms.

Tax treatment of payments – Clause 12.4

723. Vodafone submitted that clause 12.4, regarding tax treatment of payments under the Sub-loop Services Terms, should be amended so that it is more reciprocal in the treatment of Telecom and Access Seekers. Vodafone noted that the Commission made a similar amendment in the Mobile Co-location STD.[336]

724. The Commission agrees with Vodafone's submission, and has amended clause 12.4 so that it is consistent with clause 12.3 of the Mobile Co-location General Terms.

Suspension of services – Clause 14.3

725. In the draft STD the Commission invited submissions on whether non-payment on one of the Sub-loop Services should enable Telecom the right of suspending all Sub-loop Services supplied to an Access Seeker.

726. Telecom (Chorus) submitted that suspension for non-payment of all Sub-loop Services supplied to an Access Seeker at a particular Distribution Cabinet is appropriate from a practical perspective as otherwise a site visit would be required.[337]

727. Telecom (Chorus) also submitted that if all Sub-loop Services at a Distribution Cabinet are suspended, "the Access Seeker's obligation to pay the Charges for all three services is also suspended (rather than, say, the Access Seeker still being required to pay for the Sub-loop UCLL and Sub-loop Co-location Services notwithstanding that, due to the suspension of the Sub-loop Backhaul Service,

---

[334] Telecom (Chorus), *Cross-submission on draft standard terms determination for Telecom's sub-loop services*, 31 October 2008, p 31, para 138.
[335] Vodafone, *Cross-submission on the draft standard terms determination for the Sub-loop Services*, 31 October 2008, p 11.
[336] Vodafone, *Submission on the draft standard terms determination for the Sub-loop Services*, 15 October 2008, p 22.
[337] Telecom (Chorus), *Submission on draft standard terms determination for Telecom's sub-loop services*, 15 October 2008, p 69-70, para 362.

the Access Seeker cannot provide service to its End Users from that Distribution Cabinet)".[338]

728. Vodafone submitted that Telecom should not have the right to suspend all of the Sub-loop Services regardless of the specific service to which the non-payment relates. Vodafone noted that the General Terms cover all three Sub-loop Services for convenience reasons, and that the rights afforded to Telecom (such as to suspend) should not be any greater than they would have otherwise been if the individual Sub-loop Services were subject to separate STDs.[339]

729. Similarly, Orcon, Kordia and CallPlus submitted that suspension of service should only apply to the individual services for which there have been non-payments, stating that it would be unreasonable for Telecom to withhold services for which full-payment has been made.[340]

730. TelstraClear, on the other hand, submitted that suspension of all three Sub-loop Services due to non-payment for one component of the Sub-loop Services is reasonable, on the basis that the Access Seeker does not have a legitimate reason for non-payment. Furthermore, TelstraClear submitted that this approach is consistent with the requirement under the Act that the Sub-loop Co-location Service and the Sub-loop Backhaul Service can only be purchased in conjunction with the Sub-loop UCLL Service, and not as stand-alone services.[341]

731. The Commission considers that the most efficient solution for suspension of the Sub-loop Services is for Telecom to have the option of suspending all services at a particular Distribution Cabinet, even if non-payment by an Access Seeker relates to only one of the Sub-loop Services. Furthermore, if one Sub-loop Service is suspended at a Distribution Cabinet it is likely that all other Sub-loop Services at that specific Distribution Cabinet would be redundant given that an Access Seeker would have insufficient time from the date of suspension to establish a remote co-location site or an alterative backhaul solution. Accordingly, the Commission has retained the position on suspension of services as set out in the draft STD.

Liability - Clauses 16.3 and 17.3

732. Telecom (Chorus) submitted that Telecom should not be liable for any direct or indirect costs incurred by the Access Seeker as a consequence of disconnecting equipment under the Sub-loop Co-location Operations Manual in accordance with the "use it or lose it" rule. Telecom (Chorus) proposed amending clause 17.3 of the General Terms to reflect this position.[342]

---

[338] Telecom (Chorus), *Cross-submission on draft standard terms determination for Telecom's sub-loop services*, 31 October 2008, p 34.
[339] Vodafone, *Submission on the draft standard terms determination for the Sub-loop Services*, 15 October 2008, p 19.
[340] Orcon, Kordia and CallPlus, *Submission in response to the draft standard terms determination for the sub-loop services*, 15 October 2008, pp 13-14, para 71.
[341] TelstraClear, *Submission on draft standard terms determination for sub-loop access, co-location and backhaul*, 15 October 2008, p 8, paras 29-30.
[342] Telecom (Chorus), *Submission on draft standard terms determination for Telecom's sub-loop services*, 15 October 2008, p 69, para 355.

733. Vodafone did not consider this proposed addition to be reasonable given the chance that Telecom could damage Access Seeker equipment, especially in a scenario where Telecom re-locates such equipment (presumably to resolve potential heat or space constraints).[343]

734. The Commission considers that Telecom should still be liable for damages caused when removing Access Seeker equipment given that Telecom should be responsible for its actions and its contractors in these circumstances, which is the effect of the provisions of the General Terms. On further consideration, the Commission has also removed the references to "any Other Service Provider" in clauses 16.3 and 17.3 on the grounds that the intent of these provisions is already provided for under clause 19.1(i) of the General Terms. This decision is consistent with decisions on this same matter under the UCLL STD.

Responsibility for faults - Clauses 21.1 and 21.2

735. In the draft STD the Commission amended clause 21.1 of the General Terms by making Telecom responsible for "any faults which affect any Sub-loop Service and are in the Access Seeker's Network or Access Seeker Equipment, that are due to any act or omission of Telecom". The Commission also removed the phrase "except where a fault is the Access Seeker's responsibility under clause 21.2".

736. Telecom (Group) submitted that the effect of these changes is that Telecom and the Access Seeker could both be responsible for the same fault. Telecom (Group) noted that Telecom would be responsible for a fault in the Access Seeker's equipment that is due to an act or omission of Telecom under clause 21.1(a), but the Access Seeker would also be responsible for that fault under clause 21.2(b).[344] Telecom (Chorus) agreed with this submission, and proposed amendments to clauses 21.1 and 21.2 to clarify responsibility for faults.[345]

737. In order to address the potential over-lap in responsibilities for faults the Commission has largely incorporated the amendments proposed by Telecom (Chorus) in clauses 21.1 and 21.2 of the Sub-loop Services General Terms.

Distribution Cabinet Database

738. In the clause 31 of the draft Sub-loop Services General Terms the Commission included provisions requiring Telecom to maintain a database that provides relevant details for all Distribution Cabinets, including information on the availability of the Sub-loop Services at each Distribution Cabinet.

739. Orcon, Kordia and CallPlus submitted that the inclusion of the Distribution Cabinet Database will encourage competition and benefit all End Users.[346]

---

[343] Vodafone, *Cross-submission on the draft standard terms determination for the Sub-loop Services*, 31 October 2008, p 13.
[344] Telecom (Group), *Sub-loop services draft STD – Submission*, 15 October 2008, p 41, para 6.
[345] Telecom (Chorus), *Cross-submission on draft standard terms determination for Telecom's sub-loop services*, 31 October 2008, p 32, para 140.
[346] Orcon, Kordia and CallPlus, *Submission in response to the draft standard terms determination for the sub-loop services*, 15 October 2008, p 15, para 81.

740. Telecom (Group) submitted that detailed information could be more appropriately obtained through a site audit on a user pays basis than a database, stating that it is important that accurate information is available in a cost-effective manner. Telecom (Group) recommended that clause 31 be deleted, and that only information on the nature and location of Distribution Cabinets be made available, but such information should not be definitive or binding on Telecom (Chorus).[347]

741. Telecom (Chorus) submitted that the proposal in the draft STD to construct a regulated, purpose-built database is highly inefficient for the following reasons:

- the Commission should regulate only the nature of the information Telecom is required to supply, not the systems by which the information is supplied;
- high upfront costs would be expended, without any understanding of the likely demand for, or the competitive benefits that would be provided by, the Sub-loop Services;
- the information required should be specific to the needs of Telecom's customers, rather than attempting to provide a very large set of information without evidence that all information will be required or useful;
- Telecom (Chorus) should collect and record this information over time as it works with its customers; and
- the Commission has not proposed any way for Telecom to recover the costs of developing the database.[348]

742. Telecom (Chorus) also submitted that in light of Telecom's obligations under the Separation Undertakings to produce a co-ordinated inventory management system, the database set out in the draft STD would be a temporary solution, the cost of which is not justified.[349]

743. Consequently, Telecom (Chorus) proposed that Telecom should be required to provide the necessary information using existing information portals (i.e., OO&T), rather than via a database solution.[350]

744. While supportive of the database in its submission[351] on the draft STD, TelstraClear cross-submitted that "on the basis that the inventory management system required under operational separation will address concerns around the provision of detailed information pertaining to Telecom cabinets over the longer

[347] Telecom (Group), *Sub-loop services draft STD – Submission*, 15 October 2008, p 42, paras 9-11.
[348] Telecom (Chorus), *Submission on draft standard terms determination for Telecom's sub-loop services*, 15 October 2008, p 19-20, para 92.
[349] ibid, p 21, para 96.
[350] ibid, p 69, paras 359-360.
[351] TelstraClear, *Submission on draft standard terms determination for sub-loop access, co-location and backhaul*, 15 October 2008, p 8, paras 31-32.

term, TelstraClear accepts that the development of a comprehensive database in the interim is likely to be high cost and inefficient".[352]

745. At the Sub-loop Services Conference, Vodafone stated that the actual form of the database that Telecom is required to keep is not important, as long as the required information is accessible.[353] This view was generally supported by other parties at the conference.

746. The Commission considers that the information provision proposal set out by Telecom (Chorus) is more efficient than the database set out in the draft STD, especially given Telecom's obligations under the Operational Separation Undertakings. Accordingly, the Commission has not included provisions in relation to the Distribution Cabinet Database in the final Sub-loop Services STD, and has instead included provisions to give effect to the solution proposed by Telecom (Chorus).

Early Termination – Clauses 35.9 to 35.11

747. In the draft STD the Commission moved clause 37.5(f) of the General Terms in Telecom's STP to the Access Terms, on the basis that these provisions were considered to be relevant only to the Sub-loop Co-location Service.

748. Telecom (Chorus) submitted that these provisions should be reinstated in the General Terms on the grounds that if the cabinet is destroyed or a Land Occupation Arrangement under which a Distribution Cabinet is sited expires and cannot be renewed, then Telecom would not be able to provide any Sub-loop Services in respect of that Distribution Cabinet.[354]

749. Vodafone cross-submitted that the notice requirements in relation to early termination should also be transferred from the Access Terms.[355]

750. The Commission considers that the rationale presented by Telecom (Chorus) is reasonable, given that if the Distribution Cabinet is destroyed or Telecom no longer has access to the Distribution Cabinet, it will not be possible to provide any of the Sub-loop Services at that location. Therefore, the Commission has reinstated the early termination provisions in the Sub-loop Services General Terms, but in a manner that maintains the distinction between other types of termination such as in regards to the notice requirements referred to by Vodafone.

---

[352] TelstraClear, *Cross-submission on draft standard terms determination for sub-loop access, co-location and backhaul*, 31 October 2008, p 4, para 10.
[353] Sub-loop Services Conference, 8 December 2008, p 119, lines 28-30.
[354] Telecom (Chorus), *Submission on draft standard terms determination for Telecom's sub-loop services*, 15 October 2008, p 70, para 364.
[355] Vodafone, *Cross-submission on draft standard terms determination for Telecom's sub-loop services*, 31 October 2008, p 14.

Sub-loop UCLL Service Description

Splitters – Clause 2.7

751. In the draft STD the Commission's view was that the use of splitters in HDP blocks, as opposed to in the DSLAM, will promote the efficient use of space within Distribution Cabinets by eliminating the need for splitters to be located within the Rackprints of Telecom and Access Seekers. The Commission noted that this could potentially double the space available for equipment that provides broadband services. Therefore, the Commission's preliminary view was that Telecom must provide HDP blocks with or without splitters, as requested by the Access Seeker, as part of the Sub-loop Tie Cable Service.

752. Telecom (Group) submitted that Telecom (Wholesales)'s DSLAM equipment includes splitter cards, and Telecom (Wholesale) therefore intends to deploy splitters in the Co-location Area in the Distribution Cabinet. Furthermore, Telecom (Group) submitted that Access Seekers' DSLAMs may vary, and the splitters Access Seekers want to use may be different from those Telecom (Chorus) might install. Therefore, Telecom (Group) submitted that there is no reason for the STD to include a requirement for Telecom (Chorus) to provide splitters.[356]

753. In its submission on the draft STD, Telecom (Chorus) noted that it had not yet been able to test whether the Commission's approach is feasible. Telecom (Chorus) did, however, set out a number of concerns, including:

- the termination area of Telecom's cabinets has not been designed to accommodate the extra space requirements of block mounted splitters;
- splitters should be located either entirely in the termination area of the cabinet or entirely in the co-location area (as part of DSLAM equipment). A mixture of splitter locations is inefficient as it requires both the larger splitter blocks on the Distribution Frame and both 'in' and 'out' tie cables with their associated HDP blocks;
- installing splitter blocks will add an estimated $1,800 to the cost per cabinet; and
- depending on the DSLAM equipment, locating splitters in the termination area may not free up any space in the co-location area.[357]

754. In its cross-submission, Telecom (Chorus) noted that it had undertaken feasibility testing, and investigations had revealed that there is insufficient space on Distribution Cabinets for termination blocks that will accommodate splitters.[358]

---

[356] Telecom (Group), *Sub-loop services draft STD – Submission*, 15 October 2008, p 43, paras 15-17.
[357] Telecom (Chorus), *Submission on draft standard terms determination for Telecom's sub-loop services*, 15 October 2008, pp 26-28, paras 109-122.
[358] Telecom (Chorus), *Cross-submission on draft standard terms determination for Telecom's sub-loop services*, 31 October 2008, p 35, para 149.

755. At the Sub-loop Services Conference, Telecom (Chorus) noted that it had identified some splitter blocks that will fit in Telecom's Distribution Cabinets. However, Telecom (Chorus) also highlighted further potential issues in relation to the use of splitters in the termination area of Distribution Cabinets. These issues were:

- two of these products have been superseded, indicating a potential problem with supply;
- while the equipment chamber in a Distribution Cabinet is fully sealed and cooled, the cross-connect chamber is sealed but is not cooled and it is subject to an amount of solar gain, which could impact on the performance of splitters (which are passive electronics); and
- the fitting of splitter blocks would have to be done at the time the cabinet was built. To retrofit Distribution Cabinets in the field would be complicated, costly and disruptive.[359]

756. In summary, Telecom (Chorus) stated that:[360]

> …we are open to the idea of having splitter blocks in the cabinets as well. But our point would be that I don't think it is really appropriate for us to try and set hard and fast rules about exactly, you know, what solution you have….So our belief is that let's not set prescriptive rules around splitter blocks, mandating them or not; give us the flexibility to work with our customers.

757. Given the space-saving potential of passive splitters that are located on the distribution frame, the Commission still considers that Access Seekers should have the option of using such equipment under the Sub-loop Services STD. However, the Commission also acknowledges the potential technical issues that may arise in selecting and installing splitters. Therefore, the Commission has determined that HDP blocks are to be provided with splitters if requested by the Access Seeker, except where Telecom reasonably considers that it is not technically feasible to install HDP blocks with splitters, or technically suitable splitters are not available.

Sub-loop Co-location Service Description

Splitters – Clause 3.1

758. As set out in paragraph 757, the Commission has determined that Access Seekers would have the option of having Telecom install passive splitters under the Sub-loop Service STD, subject to resolution of technical issues. Similar provisions in relation to splitters in the Sub-loop UCLL Service Description have also been included in the Sub-loop Co-location Service Description.

Tie Cables – Clause 3.3

759. In the draft Sub-loop Services STD the Commission amended some of provisions in relation to tie cables proposed by Telecom (Chorus) in its STP in

[359] Sub-loop Services Conference, *Transcript*, 8 December 2008, pp 36-38.
[360] ibid, p 38, lines 15-28.

order to address apparent inconsistencies and to improve clarity. Specifically, the Commission removed references to Sub-loop Handover Fibres and Sub-loop Backhaul Connections from the Sub-loop Co-location Service, and replaced these with references to the Sub-loop Co-location Backhaul Tie Cable.

760. Telecom (Chorus) submitted that the Sub-loop Handover Fibre is required under the Sub-loop Co-location Service if an Access Seeker wishes to connect their equipment in the Distribution Cabinet to their own, or a third party's backhaul service. Furthermore, Telecom (Chorus) submitted that the Sub-loop Handover Fibre available under the Sub-loop Co-location Service performs the same function as the Sub-loop Handover Fibre in the Sub-loop Backhaul Service and the Handover Fibre in UCLL.[361]

761. Accordingly, Telecom (Chorus) submitted that use of the name "Sub-loop Co-location Backhaul Tie Cable" will result in confusion, and suggested replacing the "Sub-loop Co-location Backhaul Tie Cable" with references to the "Sub-loop Handover Fibre" and the "Inter-Distribution Cabinet Tie Cable".[362]

762. Telecom (Chorus) submitted that it would be consistent with the UCLL and UCLL Co-location STDs if the Sub-loop Handover Fibre were incorporated in to the Sub-loop Co-location Service Description.[363] However, the Commission does not consider this to be correct given that neither of these STDs refer to a Sub-loop Handover Fibre. Furthermore, the proposed Inter-Distribution Cabinet Tie Cable and Handover Fibre tie cables have significant overlap (both in terms of the provisions in the Service Description and the Operations Manual).

763. The Commission considers that the amendment proposed by Telecom (Chorus) would be more confusing than current drafting as it would result in the same name for a tie cable under the Sub-loop Co-location Service and the Sub-loop Backhaul Service. This amendment would be particularly confusing given that the proposed handover fibre under the Sub-loop Co-location Service is between the Access Seeker rackprint and Telecom's manhole, and not between the OFDF and Telecom's manhole (as under the Sub-loop Backhaul Service).

764. In the interests of improved clarity and simplicity of the Sub-loop Co-location Service, the Commission has determined that there should be one tie cable ("Sub-loop Co-location External Tie Cable") which can be used to connect the Access Seeker's rackprint in Telecom's Distribution Cabinet to the Access Seeker's or a third party's pedestal (or equivalent facility), backhaul network or ancillary backhaul equipment that is outside and adjacent to Telecom's Distribution Cabinet manhole. Consequential amendments have also been made to the Sub-loop Co-location Price List and Sub-loop Co-location Operations Manual.

---

[361] Telecom (Chorus), *Submission on draft standard terms determination for Telecom's sub-loop services*, 15 October 2008, p 90, paras 444-445.
[362] ibid, p 91, para 447.
[363] ibid, p 33, para 142.

Sub-loop Backhaul Service Description

Provision of transmission capacity – Section 5

765. The Commission has determined that defining the Sub-loop Backhaul Service as a 1 Gbps Ethernet service is likely to best give effect to section 18 of the Act. The rationale for this decision is set out in paragraphs 222 to 236.

766. The replacement of the SFP-to-SFP service set out in the draft STD with an Ethernet service has meant that the Commission has reinserted the technical specifications proposed by Telecom (Chorus) in its submission on the draft STD. The only exception is in regard to the provision of a sole bandwidth of 1 Gbps, rather than multiple bandwidths (as in the case of the UCLL Backhaul Service).

Capacity/geographic availability – Section 6

767. In the draft STD the Commission considered that where no capacity is available, the provision of the Sub-loop Backhaul Service should be at Telecom's discretion. However, consistent with the UCLL Backhaul STD, the Commission included a requirement that Telecom must not discriminate between requests for transmission capacity from an Access Seeker and any request for transmission capacity from a division of Telecom.

768. Telecom (Chorus) proposed changes to this wording in the marked-up version of the service description attached to their submission on the draft STD. Also, Orcon, Kordia and CallPlus submitted[364] that the final STD could include a process by which Telecom is required to provide additional capacity.

769. For the purposes of the Sub-loop Services STD, the Commission considers that by adopting the same provisions that were set out in the UCLL Backhaul STD in regards to providing additional capacity strikes an appropriate balance where Telecom is only obliged to provide additional capacity under circumstances where it would otherwise provide such capacity to itself. The Commission has therefore retained the majority of this provision as set out in the draft STD.

Aggregation of UCLL and Sub-loop UCLL traffic

770. In relation to Telecom's STP, Telecom (Wholesale) submitted that aggregation of UCLL and Sub-loop UCLL traffic in the relevant Local Exchange may be required by Access Seekers, and that additional aggregation equipment is required in the Exchange to support this. Telecom (Wholesale) considers that this is permitted under the existing UCLL Co-location STD as it would be part of the "Access Seeker Equipment" used to support the provision of UCLL Backhaul.[365]

771. As noted in the draft STD, the Commission agrees with Telecom (Wholesale)'s submission on the STP that equipment required for aggregation of UCLL and

[364] Orcon, Kordia and CallPlus, *Submission in response to the draft standard terms determination for the sub-loop services*, 15 October 2008, p 20.
[365] Telecom (Wholesale), *Submission on Standard Terms Proposal for Telecom's Sub-loop Services*, 18 July 2008, p 15, para 64.

Sub-loop traffic would fall within the definition of 'Access Seeker Equipment' in the UCLL Co-location STD. The Commission intends to consider a clarification of the UCLL Backhaul STD to the effect that the service may carry both UCLL and Sub-loop UCLL traffic, after release of the Sub-loop Services STD.

Changes to Local Exchanges and Distribution Cabinets

772. Telecom's Sub-loop Backhaul Service Description included provisions relating to the notice Telecom will provide Access Seekers of changes in the location of the relevant Local Exchange for a Distribution Cabinet. The Commission deleted these provisions from the Service Description as they were repeated in the Sub-loop Backhaul Operations Manual. The Commission also amended these provisions in the Operations Manual so that Telecom is required to provide Access Seekers and the Commission with 12 months' notice of network changes, rather than as much notice as reasonably practical (as previously stated under the Sub-loop Services STP). This amendment is consistent with the network change provisions in the UCLL Backhaul STD.

773. The marked-up version of the service description attached to the Telecom (Chorus) submission of the draft STD re-introduced these specific sections, however, no rationale was provided in its submission. As the additions only replicated provisions already included in the Sub-loop Backhaul Operations Manual and the Implementation Plan, the Commission has not reinstated these provisions in the Sub-loop Backhaul Service Description.

Sub-loop UCLL Service Level Terms

Service Levels for Bulk Transfers and Migrations

774. Orcon, Kordia and CallPlus submitted that service levels for bulk transfers and Migrations should also be included in the STD.[366] This view was supported by Vodafone.[367]

775. Telecom (Group) submitted that service levels should not apply to Migration orders for the same reasons that they do not apply to bulk transfer orders. In support of this view, Telecom (Group) noted that Migration orders are not a business as usual activity, and each Migration order will be complex and unique to that Migration.[368]

776. In its cross-submission, Telecom (Chorus) supported the view expressed by Telecom (Group). Telecom (Chorus) noted that the Commission determined in the UCLL STD that the nature of bulk transfers means these are best dealt with by having timeframes as agreed between parties. Telecom (Chorus) submitted that the same principles apply to Migrations.[369]

777. The Commission considers that while there are differences between Migrations and bulk transfers (as discussed in paragraph 797), they both share the similarity of containing a large number of individual orders that will likely differ on a case-by-case basis, which makes setting appropriate service levels very difficult. Under the UCLL STD[370] the Commission determined that, given variability in the nature of bulk transfer orders, Telecom would be required to use all reasonable endeavours to ensure that individual transfers covered by a bulk transfer order will be completed in a timely manner (rather than set specific service levels). Given that a similar provision is included in the Sub-loop UCLL Operations Manual for both types of orders, the Commission has not included service levels for bulk transfer orders and Migration orders.

Consolidated performance reports – Section 6

778. Telecom (Chorus) submitted that the wording of clause 6.2 of the Service Level Terms in the draft STD could be interpreted as requiring Access Seekers' individualised performance reports to be made publicly available. Telecom (Chorus) noted that the wording in the draft STD for the Sub-loop Services was identical to that used in the UCLL STD. However, in the case of UCLL, they

---

[366] Orcon, Kordia and CallPlus, *Submission in response to the draft standard terms determination for the sub-loop services*, 15 October 2008, p 16, para 89.
[367] Vodafone, *Submission on the draft standard terms determination for the Sub-loop Services*, 15 October 2008, p 22.
[368] Telecom (Group), *Sub-loop services draft STD – Submission*, 15 October 2008, p 44, paras 22-23.
[369] Telecom (Chorus), *Cross-submission on draft standard terms determination for Telecom's sub-loop services*, 31 October 2008, p 50, paras 225-229.
[370] Commerce Commission, Decision No. 609: *Standard terms determination for the designated service Telecom's unbundled copper local loop network*, 7 November 2007, para 406.

currently only make available to the public a consolidated performance report in order to protect Access Seekers' confidential information.[371]

779. The Commission has amended section 6 of the Service Level Terms to clarify that Telecom is required to provide each Access Seeker an individual performance report on a monthly basis, as well as a publicly available consolidated performance report. The consolidated report must also be sent to the Commission. Similar amendments have been made to the Service Level Terms for the Sub-loop Co-location Service and the Sub-loop Backhaul Service.

Distribution Cabinet Database

780. As noted in paragraph 746, the requirement for Telecom to maintain a Distribution Cabinet Database has been removed from the STD. Accordingly, service levels relating to availability of this database have been removed. Similar amendments have been made to the Service Level Terms for the Sub-loop Co-location Service and the Sub-loop Backhaul Service.

Inconsistency with UBA notification periods – Appendix 1

781. Telecom (Group) submitted that the Sub-loop UCLL Service Level Terms do not completely align with the Service Level Terms set out in the UBA STD, and that these inconsistencies may result in Telecom (Wholesale) becoming liable for performance penalties for faults for which it is not responsible.[372]

782. Telecom (Group) highlighted three service levels for which this could occur, including:

- notification of expected RFS date: Sub-loop UCLL Service Level 3;
- change to RFS date: Sub-loop UCLL Service Level 9; and
- notification of expected restoration time: Sub-loop UCLL Service Level 14.[373]

783. In its submission, Telecom (Group) noted that changes are required to the UBA STD in order for Telecom (Wholesale) to meet its own service levels where it consumes the Sub-loop Services.

784. The Commission considers that it is preferable to consider amendments to the UBA STD rather than the Sub-loop Services STD, and that this issue should be considered during the upcoming review of STDs.

Lead times for Sub-loop MPF orders – Appendix 4

785. In the draft STD the Commission reduced the standard lead-times for the 'Sub-loop MPF Transfer Orders' and the 'Sub-loop MPF Other Service to Sub-loop

[371] Telecom (Chorus), *Submission on draft standard terms determination for Telecom's sub-loop services*, 15 October 2008, p 72, paras 368-369.
[372] Telecom (Group), *Sub-loop services draft STD – Submission*, 15 October 2008, p 44, para 19.
[373] ibid, para 20.

MPF Transfer Order' to three working days, for consistency with the UCLL STD.

786. Telecom (Chorus) submitted that the longer lead times were agreed to by the TCF Working Party, and reflect the additional time and work required to provision services at Distribution Cabinets (as opposed to Exchanges, as in the case of UCLL). Telecom (Chorus) noted that the three working day lead-times for the equivalent orders in the UCLL STD are based on Telecom (Chorus) having staff based at the relevant Exchange who can do the work, while deploying staff to a remote location (i.e., a cabinet) requires a longer timeframe.[374]

787. Given that Distribution Cabinets are in more dispersed locations than Exchanges the Commission considers that it is reasonable and is not inconsistent with section 18 of the Act that further time is required for provisioning of Sub-loop MPF orders compared to UCLL MPF orders. The seven working day lead times for the 'Sub-loop MPF Transfer Order' and 'Sub-loop MPF Other Service to Sub-loop MPF Transfer Order' have been reinstated.

Sub-loop Co-location Service Level Terms

Space allocation service levels – Appendix 1

788. In the draft STD, the Commission introduced a number of additional service levels to reflect the draft space allocation process. In its submission, Telecom (Chorus) stated that it does not agree with this process, and therefore, service levels 5, 6 and 7 should be deleted.[375] Similarly, Telecom (Group) submitted that it does not support rationalisation and the relevant service level in the Sub-loop Co-location Service Level Terms should be removed.[376]

789. The aforementioned service levels are redundant under the revised space allocation process set out in the final Sub-loop Services STD, and have therefore been removed.

Sub-loop Backhaul Service Level Terms

Lead Times – Appendix 4

790. Under the draft STD the Commission proposed that the lead time for provisioning an order for a Sub-loop Backhaul Connection or Handover Fibre would be 21 working days, as this was consistent with the lead times set out in the UCLL Backhaul STD. Telecom (Chorus) submitted that the minimum lead time for a fibre-based service would be 25 working days where trenching was not required and 45 working days when trenching was required.[377] Telecom (Chorus) did not provide any reasons why the lead time where trenching is not

[374] Telecom (Chorus), *Submission on draft standard terms determination for Telecom's sub-loop services*, 15 October 2008, p 73, paras 373-375.
[375] ibid, p 74, para 378.
[376] Telecom (Group), *Sub-loop services draft STD – Submission*, 15 October 2008, p 45, para 25.
[377] Telecom (Chorus), *Submission on draft standard terms determination for Telecom's sub-loop services*, 15 October 2008, p 75.

required should differ between the Sub-loop Backhaul Service and the UCLL Backhaul Service. However, the Commission does understand that more than 21 working days is required where trenching is required (in order to allow for local authority notification requirements and time to undertake the work). Therefore, the Commission has retained the 21 working day lead time where trenching is not required, but included the 45 working day lead time where trenching is required.

791. Telecom (Chorus) also proposed that the lead time for a 'Change Order' of 25 working days was unnecessarily long in cases where equipment, fibre and capacity is available and a truck roll is not required.

792. Given that the scenario referred to by Telecom (Chorus) is only likely to occur in relation to changes in bandwidth or speed of the Sub-loop Backhaul Service, and that one sole bandwidth is offered under this service (or 1 Gbps), the Commission considers that this change is unnecessary.

793. Keeping in line with the objective of maintaining consistency with previous STDs (in particular the UCLL Backhaul provisions) where appropriate, the Commission has also included in this STD the amendment regarding the definition of working days which was inserted in the UCLL Backhaul STD in accordance with a previous clarification (Decision 665). This amendment clarifies that the "clock stops" on the standard lead-time of 21 days when Telecom requests the Handover Fibre or Backhaul Connection from the Access Seeker (if not already provided) and restarts again when the Handover Fibre or Backhaul Connection is received by Telecom.

Sub-loop UCLL Operations Manual

Forecasting – Section 7

794. Orcon, Kordia and CallPlus submitted that forecasts for the Sub-loop Services should be included with forecasts for UCLL services.[378]

795. In response, Telecom (Chorus) noted that this was recommended by the TCF, but cannot be implemented without consequential changes to the UCLL STD. Therefore, Telecom (Chorus) submitted that this issue should be resolved in the review of STDs planned by the Commission.[379] The Commission considers that this is the most appropriate approach.

796. In addition, Vodafone submitted that forecasts for bulk transfers and Migrations should be combined.[380] This view was supported by Orcon, Kordia and CallPlus, who suggested that bulk transfers and Migrations are relatively the same service and are likely to be completed by the same or similar field service.[381]

797. Telecom (Chorus) submitted that Migrations are distinct from bulk transfers as they have different characteristics and requirements.[382] Telecom (Chorus) noted that a Migration is a significant and staged process involving the Migration of lines from an Exchange to a Distribution Cabinet.[383] The Commission understands that Migrations involve work at both the local Exchange and Distribution Cabinet, whereas this is not the case with bulk transfers.

798. The Commission agrees that Migrations and bulk transfers are distinct processes, and considers that they are sufficiently different in nature to warrant separate forecasting for each. Accordingly, the Commission has determined that Access Seekers are required to provide separate forecasts for Migrations and bulk transfers.

Bulk Transfers – Clause 7.2

799. Vodafone submitted that 54% of existing cabinets currently have less than 10 Vodafone customers, and therefore, in scheduling a mass migration event with a minimum of 10 orders per bulk transfer, Vodafone would be required to use the BAU process for migrating over half of its total cabinetised customers, which is non-economical. Therefore, Vodafone submitted that the definition of bulk

---

[378] Orcon, Kordia and CallPlus, *Submission in response to the draft standard terms determination for the sub-loop services*, 15 October 2008, p 16, para 90.
[379] Telecom (Chorus), *Cross-submission on draft standard terms determination for Telecom's sub-loop services*, 31 October 2008, p 43, paras 190-191.
[380] Vodafone, *Submission on the draft standard terms determination for the Sub-loop Services*, 15 October 2008, p 24.
[381] Orcon, Kordia and CallPlus, *Submission in response to the draft standard terms determination for the sub-loop services*, 15 October 2008, p 17, para 91.
[382] Telecom (Chorus), *Cross-submission on draft standard terms determination for Telecom's sub-loop services*, 31 October 2008, p 39, paras 171-172.
[383] Telecom (Chorus), *Submission on draft standard terms determination for Telecom's sub-loop services*, 15 October 2008, p 95, para 473.

transfer should be amended from the transfer of 10 Sub-loop MPFs to 5 Sub-loop MPFs.[384]

800. The rationale provided by Vodafone for revising the limit of 10 orders for a bulk transfer seems to be based on the number of End Users it has at a cabinet, rather than any cost-based argument in relation to the service. Accordingly, the Commission has retained the limit of 10 Sub-loop MPF transfers to qualify for the bulk discount, as agreed by the TCF.

HDB3 interference – Clause 9.9

801. Telecom's STP proposed that replacement of an HDB3 system, when that system is causing interference to xDSL technology, should only occur if it is reasonably practicable to do so. In the draft STD the Commission reverted to the HDB3 provisions set out in the UCLL STD, but requested further information on the nature and likelihood of scenarios where it may not be reasonably practicable to replace HDB3 services.

802. Telecom (Chorus) submitted that it may not be reasonably practicable to immediately replace HDB3 services in situations where HDB3-based equipment is supporting delivery of the following types of services:

- ISDN services providing trunks for an End User's PBX;
- POTS services for End Users via MUX equipment;
- Data services such as wideband digital data service providing networking for an End User's application; or
- Megalink data services providing interconnection links for a carrier's network.[385]

803. Telecom (Group) submitted that xDSL technology should not be prioritised over HDB3 technology where it is not practicable to replace the HDB3 technology. Telecom (Group) further submitted that HDB3 is used by many of Telecom's customers such as banks, and its removal would also affect facilities such as mobile phone towers.[386]

804. Orcon, Kordia and CallPlus supported the revisions made by the Commission, and submitted that HDB3 services limit the performance that asymmetrical technologies such as ADSL2+ and VDSL can deliver. Orcon, Kordia and CallPlus also noted that new technologies, such as VDSL are capable of providing the same services provided by HDB3.[387]

---

[384] Vodafone, *Submission on the draft standard terms determination for the Sub-loop Services*, 15 October 2008, p 24.
[385] Telecom (Chorus), *Submission on draft standard terms determination for Telecom's sub-loop services*, 15 October 2008, pp 76-77, para 396.
[386] Telecom (Group), *Sub-loop services draft STD – Submission*, 15 October 2008, p 45, paras 27-28.
[387] Orcon, Kordia and CallPlus, *Submission in response to the draft standard terms determination for the sub-loop services*, 15 October 2008, p 17, para 93.

805. Vodafone submitted that there are about 80 broadband users for every HDB3 user on the Telecom copper access network, and that this ratio is likely to increase as more and more customers take up broadband. Vodafone submitted that, over time, priority should be given to asymmetrical technologies which are likely to provide greater benefit to End Users.[388]

806. In response, Telecom (Group) submitted that the emulation of 2Mbps services on VDSL2 is problematic for many applications, and VDSL2 will only be a reasonable substitute for End Users within 1 kilometre of the Distribution Cabinet. Telecom (Group) also stated that, in its experience, emulation of 2Mbps services over Ethernet can have substantial negative impacts on End Users in terms of cost and reliability.[389]

807. At the Sub-loop Services Conference, Telecom (Wholesale) stated that the number of HDB3 circuits could reduce "fairly quickly" and that they can "address problems when they occur".[390] Telecom (Wholesale) also noted that if there is interference between HDB3 and DSL lines then Telecom would likely be the party most impacted by the degradation in service on DSL lines, which meant that there was a degree of symmetry in the impacts on Access Seekers and Telecom.

808. Given the low chance of interference issues occurring (and that this would reduce over time), symmetry of impacts, and the potentially high cost of forced replacement of HDB3 services, the Commission has determined that HDB3 replacement should only be required to occur where practicable (where, for example, large costs will not be incurred). Accordingly, the Commission has amended clause 9.9 of the Operations Manual as per the submission from Telecom (Chorus), with the exception of clause 9.9.2, which implied that Access Seekers would be required to meet some of the costs. This amendment is likely to best give effect to section 18 of the Act as the approach minimises unnecessary costs of premature forced replacement of equipment.

Number portability – Clause 9.11

809. Orcon, Kordia and CallPlus submitted that clause 9.11.2, which provides that Telecom is not liable for a failure to meet any relevant Service levels for a Sub-loop UCLL transaction where the failure to meet those Service Levels is a result of Telecom's compliance with requirements under the Local and Mobile Number Portability ('LMNP') Terms, is unnecessary as it creates an imbalance between the two sets of service levels. Orcon, Kordia and CallPlus submitted that this is because penalties for breaching the LMNP terms are much lower than penalties for Sub-loop UCLL.[391]

---

[388] Vodafone, *Submission on the draft standard terms determination for the Sub-loop Services*, 15 October 2008, p 14.
[389] Telecom (Group), *Sub-loop services draft STD – Cross-submission*, 31 October 2008, p 19-20, paras 68-71.
[390] Sub-loop Services Conference, 8-9 December 2008, p 299.
[391] Orcon, Kordia and CallPlus, *Submission in response to the draft standard terms determination for the sub-loop services*, 15 October 2008, p 17, para 94.

810. Telecom (Chorus) submitted that ensuring its customers can coordinate a LMNP request and a Sub-loop MPF transfer will invariably result in failure of Telecom to meet the relevant Sub-loop UCLL Service Levels. Telecom (Chorus) submitted that the two regulatory requirements need to work together.[392]

811. The Commission agrees that Telecom should not be penalised for a failure to meet the Sub-loop UCLL Service Levels where such failure is a result of compliance with the LMNP terms and notes that this issue was considered as part of the UCLL and UCLL Co-location STD clarification (Decision No. 643) that was issued on 21 May 2008. Therefore, the Commission has retained clause 9.11 as per the draft STD and the earlier Decision No. 643.

Insufficient capacity in Distribution Cabinets – Clause 9.13

812. Telecom (Group) submitted that Telecom (Chorus) should not be required to rationalise equipment as part of its Grooming obligation as it is not appropriate to remove equipment (including HDP blocks and tie cables), and that the TCF agreed that rationalisation of equipment is undesirable as it has the potential to drive significant costs into the Sub-loop Services.[393]

813. The Commission considers that space management within the Sub-loop Co-location Area (where active equipment is located) versus the distribution frame of the Distribution Cabinet (where HDP blocks are located) entails addressing slightly different issues with a different set of potential solutions. For example, given the absence of heat issues and the smaller size of equipment, space on the distribution frame can be more easily re-arranged and made available. Accordingly, the Commission considers that there should be sufficient flexibility to address space issues outside of the Sub-loop Co-location Area and thereby address the concerns raised by Telecom (Group), without amending the definition of Grooming.

Land Occupation Arrangements – Clause 9.14

814. As noted in paragraph 714, the Commission considers that provisions in relation to land occupations arrangements are relevant to both the Sub-loop Co-location and Sub-loop UCLL Service. Therefore, the Commission has re-inserted many of the land occupation provisions in clause 9.14 of the Sub-loop UCLL Operations Manual. The Commission has also clarified the requirements on the Access Seeker regarding seeking landlord's consent or notifying the landlord of their use of the Distribution Cabinet. Similar amendments have also been made to the Sub-loop Co-location Operations Manual.

Pre-qualification – Clauses 9.18 to 9.20

815. The draft STD required information returned by OO&T to include a cabinet identification code and whether an Other Service to Sub-loop MPF Transfer Order is required as opposed to a Sub-loop MPF Transfer Order. This

[392] Telecom (Chorus), *Cross-submission on draft standard terms determination for Telecom's sub-loop services*, 31 October 2008, p 47, paras 210-211.
[393] Telecom (Group), *Submission on draft standard terms determination for Telecom's sub-loop services*, 15 October 2008, p 46, paras 32.

information was considered important and helpful to Access Seekers in determining subsequent orders.

816. Telecom (Chorus) submitted that both of these types of information are already supplied to Access Seekers through other fields in Telecom's systems and that as UCLL will be consumed by Telecom (Wholesale) in the near future the distinction in transferring from a non-UCLL service will become irrelevant.[394]

817. Given that this necessary information will be already available to Access Seekers via Telecom's ordering systems, the Commission considers that references to the cabinet identification code and whether an Other Service to Sub-loop MPF Transfer Order is required have been removed.

Migration – Deletions

818. Telecom (Group) submitted that the Commission has deleted the wording that makes it clear that the Access Seeker will not be able to provide services to the customer if the Access Seeker does not request a Migration or transfer of the service. Telecom (Group) submitted that this wording should be included in the STD for clarity.[395]

819. Similarly, Telecom (Chorus) noted amendments made by the Commission in the draft STD, including removing:

- clause 7.3.2 and the part of clause 9.26.2 of the Sub-loop Services STP Operations Manual for Sub-loop UCLL that specified when a Migration can occur;
- the circumstances where an Access Seeker can request a Migration; and
- removing the provisions that set out what an Access Seeker must do if they do not want to migrate their End Users at the installation of a Distribution Cabinet.

820. Telecom (Chorus) submitted that these clauses reflect the reality of the TCF-agreed Migration process and, accordingly, should be reinserted.[396]

821. The Commission has not re-inserted the Migration provisions as proposed by Telecom (Chorus) and Telecom (Group) on the grounds that these provisions are repeated in clause 7.3 of the Sub-loop UCLL Operations Manual or that they are references to obligations on the Access Seeker that are not directly relevant to provisioning any Sub-loop Service and are therefore outside the scope of the Operations Manual.

[394] Telecom (Chorus), *Submission on draft standard terms determination for Telecom's sub-loop services*, 15 October 2008, p 82.
[395] Telecom (Group), *Sub-loop services draft STD – Submission*, 15 October 2008, p 45, para 26.
[396] Telecom (Chorus), *Submission on draft standard terms determination for Telecom's sub-loop services*, 15 October 2008, pp 78-79, paras 403-404.

Migration Orders – Clause 9.25.7

822. In the draft STD the Commission amended clause 9.24.7 to allow an Access Seeker to provide Telecom (Chorus) with a list of individual lines to be included in the Migration Order. Telecom (Chorus) submitted that this amendment would mean that they would be required to enter the orders into the relevant Telecom system on behalf of Access Seekers but must recover the cost of the time this will require.[397]

823. Accordingly, Telecom (Chorus) proposed that the Project Management Charge for Migration Orders (item 1.5 of the Sub-loop UCLL Price List) will apply to this service.

824. The Commission agrees that this charge is appropriate given that Telecom would likely be incurring a cost in undertaking this work. However, the Commission has also determined that Access Seekers will have the option to enter the orders themselves, thereby avoiding this charge.

Migration Orders – 9.25.9

825. Vodafone submitted that the non-cancellation period for Migration orders should be kept at 5 working days before the first copper line is scheduled to be transferred rather than the 8 working days set out in the draft STD.[398] Telecom (Chorus) responded that any reduction will lead to an increased risk of End Users being missed off Migration lists due to late posting of completed service orders.[399]

826. In the interests of consistency and simplicity, the Commission considers that the date after which cancellation is not permitted should continue to be the same date by which Migration orders are required to be submitted (which is within 8 working days of the desired implementation date). As such, the Commission has retained the non-cancellation period of 8 working days.

Migrations – Dual feed

827. Orcon, Kordia and CallPlus submitted that the Commission should make the Migration process available for dual feed scenarios, which are where the telecommunications services are provided over the copper line from the Exchange at the same time as other services are provided from the Distribution Cabinet to the same End User.[400]

828. The Commission considers that dual feed is relevant to the Sub-loop Services STD in relation to Migration orders, as an Access Seeker may wish to migrate their Exchange-based services to the Distribution Cabinet after the cabinet has

[397] Telecom (Chorus), *Submission on draft standard terms determination for Telecom's sub-loop services*, 15 October 2008, p 79, para 406.
[398] Vodafone, *Submission on draft standard terms determination for Telecom's sub-loop services*, 15 October 2008, p 15.
[399] Telecom (Chorus), *Cross-submission on draft standard terms determination for Telecom's sub-loop services*, 31 October 2008, p 39.
[400] Orcon, Kordia and CallPlus, *Submission on the draft standard terms determination for the Sub-loop Services*, 15 October 2008, p 17.

been installed. The Commission considers that the provisions in relation to Migrations that are set out in the Sub-loop UCLL Operations Manual are sufficient to allow Access Seekers to migrate directly from the exchange-based UCLL, UBA or resold services at the time the Distribution Cabinet is installed, or from dual fed services to the Sub-loop UCLL Service after the cabinet is installed. Therefore, the Commission has not made any further amendments.

Faults – Clause 11.1.7(f)

829. In the draft STD the Commission amended clause 11.1.7(f) by including the word "estimated". This had the effect of requiring the Access Seeker to provide the estimated time the fault occurred when reporting a fault to Telecom.

830. Telecom (Chorus) submitted that it does not agree with this change, as it adds a level of uncertainty to an important part of the fault resolution process. Telecom (Chorus) submitted that in an unbundled network, the party that has the equipment connected to the copper line is best placed to know when the event occurred, and that for the Sub-loop Services and UCLL, this is the Access Seeker.[401]

831. Telecom (Chorus) further submitted that if the Access Seeker is only able to provide an estimated time (rather than the actual time), then the service levels should not apply in these circumstances as this may affect Telecom's ability to notify the Access Seeker of, or restore the fault within, the expected restoration time.[402]

832. The Commission considers that the most efficient process would be one in which the Access Seeker is required to provide Telecom with their best estimate of the time that a fault occurred. Exceptions to fault restoration service levels are not considered to be required because Telecom is only required to meet the 'expected restoration time' which it sets itself, rather than specific standard restoration times. Accordingly, the Commission has determined that clause 11.1.7(f) should refer to "the Access Seeker's best estimate of the time that the fault occurred". This amendment has also been made to the Sub-loop Co-location and Sub-loop Backhaul Operations Manuals.

Tie Cable maintenance – Clause 12.2.12

833. Clause 12.2.12 of the Sub-loop UCLL Operations Manual set out in the draft STD stated that the Access Seeker will own the Sub-loop Tie Cable and will be responsible for its maintenance. It also stated that because tie cables will be located within the Distribution Cabinet, the Access Seeker must request Telecom to carry out any maintenance.

[401] Telecom (Chorus), *Submission on draft standard terms determination for Telecom's sub-loop services*, 15 October 2008, p 83, paras 418-419.
[402] ibid, p 83, para 418.

834. Vodafone submitted that Telecom should only carry out tie cable maintenance (and apply the appropriate charge) once this has been agreed with the Access Seeker.[403]

835. The Commission considers that Telecom must obtain the agreement of the Access Seeker that tie cable maintenance work prior to Telecom performing such maintenance work, given that the Access Seeker owns the Sub-loop Tie Cable and is responsible for its maintenance. Clause 12.2.12 has been amended accordingly.

Sub-loop Co-location Operations Manual

Distribution Cabinet Information – Section 11

836. As noted in paragraphs 738 to 746, Telecom (Chorus) proposed an alternative solution for Access Seekers to obtain information in relation to Distribution Cabinets rather than via a new dedicated database. Accordingly, Telecom (Chorus) submitted that a new section 11 should be inserted to reflect its proposed solution for Distribution Cabinet information.[404]

837. Consistent with the decision to replace the Distribution Cabinet Database with information provided via Telecom's current ordering systems, the Commission has included the proposed section 11 in the Sub-loop Co-location STD.

Site Audits – Section 12

838. Telecom (Chorus) noted that consequential changes are required to the site audit process to reflect its approach to space allocation and its Distribution Cabinet information proposal.[405] The Commission has implemented these proposed changes.

Landlord approvals – Section 14

839. In the draft STD the Commission amended section 13 of the Sub-loop Co-location Operations Manual to incorporate provisions from the Sub-loop Services General Terms.

840. Telecom (Chorus) submitted that although it is broadly comfortable with these changes, the provisions should be refined to clarify that:

- Telecom is only required to provide a copy of a Land Occupation Arrangement to an Access Seeker to the extent it is legally able to do so without breaching any confidentiality obligations; and

[403] Vodafone, *Submission on the draft standard terms determination for the Sub-loop Services*, 15 October 2008, p 28.
[404] Telecom (Chorus), *Submission on draft standard terms determination for Telecom's sub-loop services*, 15 October 2008, p 85, para 426.
[405] ibid, p 86, para 427.

- the obligation to use "best endeavours" and "reasonable endeavours" under these clauses will not require it to pay money to any landlord or other third party to obtain any required consents.[406]

841. The Commission considers that while there is merit in the amendments proposed by Telecom (Chorus), in principle, the proposed drafting is unnecessarily broad. The Commission has amended the provisions relating to Land Occupation Arrangements to the effect that Telecom is not required to provide information to the Access Seeker that would be deemed commercially confidential under clause 31 of the General Terms, provided Telecom uses its best endeavours to obtain a waiver of the confidentiality obligations. However, proposed amendments in relation to payment of large charges to third parties have not been made given that this scenario is likely to be excluded from the term "all reasonable endeavours". Similar amendments where also included in the Sub-loop UCLL Operations Manual.

Security – Part 11

842. In the draft STD the Commission noted that Telecom (Chorus) was in the process of investigating the possibility of an alternative, electronic security mechanism but had not yet established whether this is feasible, either practically or economically.

843. Telecom (Group) submitted that the security of equipment installed in Distribution Cabinets is likely to be of concern to all parties using the Sub-loop Co-location Service. Accordingly, Telecom (Group) submitted that proposals to determine appropriate security measures should be discussed further through the TCF.[407]

844. Telecom (Chorus) submitted that it has investigated the feasibility of an electronic lock and key system, and an electronic access card, but both options are likely to be too expensive and would significantly increase the monthly Sub-loop Co-location Charge and cost to its customers of keys/access cards without a clear customer demand for the security. Telecom (Chorus) noted, however, that some customers may value additional security highly, and they are willing to discuss additional security options as a commercial service on a cabinet by cabinet basis.[408]

845. The Commission considers that the specific security services underlying the draft STD (such as a manual lock and key mechanism) provide sufficient basic security for active equipment. Further investment in improvements of this level of security do not, at this stage at least, seem efficient given the likely higher costs this would impose on Access Seekers and the questionable benefits. On this basis, the Commission has not amended the provisions in the Sub-loop Co-location Operations that relate to security of Distribution Cabinets.

---

[406] Telecom (Chorus), *Submission on draft standard terms determination for Telecom's sub-loop services*, 15 October 2008, p 89, para 438.
[407] Telecom (Group), *Sub-loop services draft STD – Submission*, 15 October 2008, p 47, para 38.
[408] Telecom (Chorus), *Submission on draft standard terms determination for Telecom's sub-loop services*, 15 October 2008, p 91, paras 448-451.

Sub-loop Backhaul Operations Manual

Consistency with UCLL Backhaul

846. The Commission has amended this Operations Manual in several places to ensure consistency with similar provisions in the UCLL Backhaul STD, where appropriate (for example clauses 4.1.2 in relation to dispute resolution and clause 7.1.1 in relation to Access Seeker forecasting).

WACC for overforecasts – Clause 7.4.7

847. Under the draft Sub-loop Backhaul Operations Manual, the Commission proposed a post-tax WACC of 9.5%, which is used to calculate the compensation payable by an Access Seeker for equipment purchased by Telecom to meet forecast Access Seeker orders but which were never eventually made. As discussed in paragraph 488 the Commission has determined that the WACC for Telecom's backhaul services should be a post-tax rate of 8.7% (12.4% pre-tax). This figure has therefore replaced the previous WACC of 9.5%.

Backhaul Connections and Handover Fibre – Sections 12 and 13

848. Consistent with the decision to replace the SFP-to-SFP backhaul service with an Ethernet backhaul service, the Commission has removed references to SFPs from the definitions of the Sub-loop Backhaul Connections and Sub-loop Handover Fibres. The Commission has also reinserted the reference to the cable specifications for these cables, as proposed by Telecom (Chorus).[409]

Sub-loop Backhaul to a bundled Exchange – Section 18

849. In its submission provided with the STP, Telecom (Chorus) noted that there is a potential gap in the regulated services regime where an Access Seeker seeks to unbundle a Distribution Cabinet and that cabinet is fed off a 'bundled'[410] Exchange. Telecom (Chorus) noted that in this case the Access Seeker would potentially have no ability to route the Sub-loop Backhaul Service traffic further than the Exchange, as a restriction on the UCLL Backhaul Service is that it must only be used for the purposes of supporting the UCLL Service.[411]

850. The Sub-loop Services STP set a potential solution, where Telecom would provision both the Sub-loop Backhaul Service and the UCLL Backhaul Service as an end-to-end service, notwithstanding that the prerequisite for the UCLL Backhaul Service (i.e., that the Local Exchange be unbundled by the Access Seeker) is not satisfied.

851. However, the Commission noted that:

---

[409] Telecom (Chorus), *Cross-submission on draft standard terms determination for Telecom's sub-loop services*, 31 October 2008, p 43.
[410] A bundled Exchange is a Local Exchange that has not been unbundled in accordance with the UCLL Co-location STD.
[411] Telecom (Chorus), *Standard Terms Proposal for Telecom's Sub-loop Services,* 27 June 2008, Submission, p 64, para 272.

- the UCLL Backhaul Service is only available in the markets for transmission capacity where Telecom faces limited, or is likely to face lessened, competition; and
- as determined in the UCLL Backhaul STD, the competition test will be performed on an ongoing basis as further Exchanges become unbundled.

852. Therefore, the Commission considered that Telecom's proposed solution of provisioning an end-to-end regulated service could potentially result in the UCLL Backhaul Service being supplied without the competition test being conducted on the relevant links. Consequently, the draft STD required that Telecom notify the Commission within two working days when an Access Seeker orders the Sub-loop Backhaul Service to a bundled Exchange to enable the Commission to determine the availability of the UCLL Backhaul Service.

853. Telecom (Chorus) submitted that the proposed notification of the Commission within 2 working days would not be workable and suggested a monthly notification as an alternative.[412] Telecom (Chorus) did not consider the potential delay in the Commission's decision of the availability of the service to be an issue as they would provide a backhaul service between Exchanges regardless of the Commission's decision of the competitiveness of the route.[413]

854. On further consideration of this issue and in light of the commitment by Telecom (Chorus) to provide a commercial equivalent to the UCLL Backhaul Service from bundled Exchanges, the Commission considers that the availability of the UCLL Backhaul Service should only be determined under the UCLL Backhaul STD. The Commission has amended section 18 of the Sub-loop Backhaul Operations Manual to this effect. However, the Commission intends to review the UCLL Backhaul STD (as part of the review of all STDs) to consider a more sustainable solution.

855. The Commission has also determined that the Access Seeker shall have access to the Sub-loop Backhaul Service at a bundled Exchange. Even though the Access Seeker may not be able to install equipment at a bundled Exchange, as the UCLL Co-location Service would not be available, the Access Seeker should still have the opportunity to use the Backhaul Handover Fibre at the Exchange end of the service to connect to a remotely co-located site with a non-Telecom backhaul connection. Under this scenario, the Access Seeker would not require co-location space in the Exchange or the UCLL Backhaul Service, thereby making it irrelevant that the Exchange is not unbundled.

[412] Telecom (Chorus), *Submission on draft standard terms determination for Telecom's sub-loop services*, 15 October 2008, p 92.
[413] ibid, p 92.

Sub-loop Co-location Access Terms

Land requirements

856. As noted in paragraph 714 above, clause 4.1 from the draft Sub-loop Co-location Access Terms has been relocated to the General Terms as these provisions are required for both the Sub-loop UCLL Service and the Sub-loop Co-location Service. The definition of "Road" has also been transferred as noted in paragraph 705.

Access Seeker obligations – Clause 6.1(h)

857. Clause 6.1(h) of the Access Terms requires that the Access Seeker will not do anything which would cause Telecom to be in breach of any conditions of its land occupation arrangements. As discussed in paragraph 841, the Commission has limited this clause to only those actions or things that the Access Seeker is reasonably aware would cause Telecom to be in breach on the land occupation arrangement. This amendment addresses the situation where the Access Seeker causes Telecom to breach a specific provision of the land occupation arrangement that the Access Seeker is not aware of because it is confidential between the landlord and Telecom.

Early termination – Section 9

858. As noted in paragraphs 747 to 749 above, the Commission has moved the early termination provisions to the Sub-loop Services General Terms.

IMPLEMENTATION PLAN

Service Component

859. The Implementation Plan set out in the draft STD provided for a Soft Launch of key components of the Sub-loop Services for the first time(s) they are ordered by an Access Seeker. This was based on a concept developed through the TCF.

860. Telecom (Chorus) proposed that in practice the Soft Launch would be for all three Sub-loop Services for a particular cabinet type, implying that cabinet type should be the primary distinction for different Soft Launches rather than service components.[414]

861. The Commission has retained the approach set out in the draft STD for several reasons. First, the draft STD already includes Soft Launch distinctions for different types of cabinets where specifically relevant, which makes Telecom (Chorus)'s suggested amendment redundant. Second, the draft STD allows for Soft Launches of a service even where an Access Seeker only purchases one or two of the three Sub-loop Services. Accordingly, the Commission has not accepted the amendments proposed by Telecom (Chorus) in relation to removing references to service components from the Implementation Plan.

Migration and transfer service components – Section 6

862. As noted in paragraph 546 to 550, a Migration is required by the Access Seeker where they wish to change from a service that uses a copper line that terminates at the Exchange (such as UCLL) to the Sub-loop UCLL Service for which the copper line terminates at the Distribution Cabinet.

863. Telecom (Chorus) has submitted that the Migration process needs to be tested as it has not been previously undertaken, meaning that references to 'transfer' in section 6 of the Implementation Plan should be replaced with 'Migration' to ensure that Migrations are included in Soft Launches.[415]

864. Implementing the amendment proposed by Telecom (Chorus) would mean that the first Soft Launch would be required to include a Migration order. However, the first Distribution Cabinet(s) to be unbundled under this Sub-loop Services STD may be one that is already commissioned and where Access Seeker is using the UBA Service (via Telecom's DSLAM) to provide telecommunications services to End Users. In this scenario the Access Seeker would be required to transfer all of their End User's to the Sub-loop UCLL Service, rather than seek a Migration.

865. Implementing the amendment proposed by Telecom (Chorus) could unreasonably delay Sub-loop Services being provisioned under the scenario where Distribution Cabinets are already installed. Furthermore, given that there are not any specific performance penalties for Migrations there will not be any material impact on Telecom of not requiring a Migration to be included in the

[414] Telecom (Chorus), *Submission on draft standard terms determination for Telecom's sub-loop services*, 15 October 2008, p 94.
[415] ibid, p 9-95.

first Soft Launch. Accordingly, the Commission has allowed for the option for Soft Launches to include a transfer, or a Migration, or a mixture of the two.

Date for configuration of Operational Support Systems (OSS) – Clause 4.2

866. Telecom (Chorus) submitted that if the Sub-loop Backhaul Service changes significantly from that set out in the draft, then OSS configuration may take longer than 10 working days.[416] In order to manage this risk, Telecom (Chorus) proposed that the Commission could either:

- inform Telecom (Chorus) of the final terms of the STD before the STD is released, so that the OSS configuration can be completed within 10 working days; or
- extend the period for completion of the OSS configuration.

867. Given the differences in the options considered for the technical composition of the Sub-loop Backhaul Service, the Commission considers that an extension to the period for OSS configuration is reasonable, and has included a period of 20 working days in the Implementation Plan.

Distribution Cabinet Information – Clause 4.4

868. In accordance with paragraph 746 the Commission has replaced references to the Distribution Cabinet Database with references to Distribution Cabinet Information. Furthermore, Telecom (Chorus) submitted that provision of Distribution Cabinet Information should be split into two stages with the stage 1 information (Cabinet ID, NZMG co-ordinates, cabinet type and relevant Exchange for the copper feeder) being provided to the Commission and Access Seekers within 20 working days of the Determination Date.[417] Stage 2 information would require adding the information on the relevant Exchange for the Sub-loop Backhaul Service to the stage 1 information and providing all such information through OO&T within 50 working days of the Determination Date.

869. No cross-submissions were made specifically on the timing of this information. Furthermore, given that clause 4.5 of the Implementation Plan requires Telecom to provide Access Seekers and the Commission with details of the relevant local Exchanges for Distribution Cabinets being commissioned within 12 months of the Determination Date, sufficient information should be available for Access Seekers to forecast orders. Therefore, the Commission has accepted the amendments proposed by Telecom (Chorus). The Commission has also made consequential amendments to the provisions in relation to key performance indicators.

Performance Penalties – Clause 8.10

870. Orcon, Kordia and CallPlus submitted that Telecom should not be exempt from paying performance penalties for service levels that it does not meet during a

[416] Telecom (Chorus), *Submission on draft standard terms determination for Telecom's sub-loop services*, 15 October 2008, p 94-95.
[417] ibid, p 95.

Soft Launch. The Commission notes that not requiring Telecom to pay performance penalties during a Soft Launch is consistent with previous STDs and does not consider there to be justification for deviating from this approach for the Sub-loop Services STD.[418]

Dated this 18th day of June 2009

Paula Rebstock
Commissioner
Commerce Commission

[418] Orcon, Kordia and CallPlus, *Submission in response to the draft standard terms determination for the sub-loop services*, 15 October 2008, p 20.

APPENDIX A: SUB-LOOP SERVICES TERMS

Appendix A comprises the following documents:

Sub-loop Services General Terms

Service Appendix 1: Sub-loop UCLL Service

Schedule 1: Sub-loop UCLL Service Description

Schedule 2: Sub-loop UCLL Price List

Schedule 3: Sub-loop UCLL Service Level Terms

Schedule 4: Sub-loop UCLL Operations Manual

Service Appendix 2: Sub-loop Co-location Service

Schedule 1: Sub-loop Co-location Service Description

Schedule 2: Sub-loop Co-location Price List

Schedule 3: Sub-loop Co-location Service Level Terms

Schedule 4: Sub-loop Co-location Operations Manual

Schedule 5: Sub-loop Co-location Access Terms

Service Appendix 3: Sub-loop Backhaul Service

Schedule 1: Sub-loop Backhaul Service Description

Schedule 2: Sub-loop Backhaul Price List

Schedule 3: Sub-loop Backhaul Service Level Terms

Schedule 4: Sub-loop Backhaul Operations Manual

Implementation Plan

APPENDIX B: SUMMARY OF SUBMISSIONS ON CORE PRICING

Submissions and cross-submissions on draft STD

Sub-loop UCLL Service - Submissions

Telecom (Chorus)

871. In commenting on the Commission's benchmarking, Telecom (Chorus) proposed that the Commission use the same approach to set the Sub-loop UCLL price as was used to set the UCLL price, and referred to the LECG submission in support of this.

872. Telecom (Chorus) submitted that the Commission's proposed benchmarking of Sub-loop proportions has a number of difficulties:[419]

- the Commission's sample includes a large number of jurisdictions which in the UCLL STD were not regarded as being comparable to New Zealand;
- LECG shows that the expanded dataset introduces a bias into the results, with the Commission's ratio being lower than all but one of the comparable jurisdictions;
- the Commission's exclusion of jurisdictions where the sub-loop price equals or exceeds the full UCLL price cannot be justified as a benchmarking issue and distorts the results;
- the Commission's proposed approach makes full use of US zone data, despite acknowledging that this is likely to over-represent US non-urban zones; and
- a ratio calculated from one dataset and then applied to the benchmark results from another dataset is technically incorrect.

873. Telecom (Chorus) concluded that the Sub-loop UCLL rental price should be set using the same methodology as was used by the Commission to set UCLL prices in Decision 609, as applied by LECG. This produces an average Sub-loop UCLL price of $20.00 per month, which is de-averaged into an urban charge of $15.38 per month, and a non-urban charge of $32.35 per month.

874. In respect of the Sub-loop connection charges, Telecom (Chorus) accepts that the Commission's proposed approach to benchmark the ratio of Sub-loop UCLL/UCLL connection prices is a pragmatic approach. While the Commission is required to benchmark where possible, Telecom (Chorus) noted that LECG advised of "data issues" that would make it difficult to apply the same methodology used to benchmark the full UCLL connection charge.

[419] Telecom (Chorus), *Submission on draft Sub-loop Services STD*, 15 October 2008, paragraph 194.

LECG

875. LECG noted that in the draft STD, the Commission identified a number of difficulties in applying the benchmarking methodology used in the UCLL STD to determine the Sub-loop MPF price. These included the absence of state-wide average Sub-loop MPF prices in the US, and the difference in sample sets (as only 6 of the 10 jurisdictions that were comparable in the UCLL STD have Sub-loop MPF rates).[420]

876. LECG submitted that they had identified weights that can be used to derive state average sub-loop rates and thus the approach taken in the UCLL STD can be followed.

877. LECG also submitted that while it agreed with the concern expressed by the Commission over the smaller set of comparable jurisdictions with sub-loop prices, it did not agree with the Commission's proposed use of all available Sub-loop UCLL price points.[421] In particular, LECG noted that the jurisdictions that are comparable to New Zealand are likely to have sub-loop prices that are systematically different to the non-comparable jurisdictions. LECG claimed support for this by noting that the Commission's benchmarked ratio of 60.4% is lower than the sub-loop ratios of all but one of the available comparable jurisdictions, with only New Mexico having a (marginally) lower ratio of 60.0%.

878. According to LECG, the Commission's approach in the draft STD is not consistent with the IPP, which requires benchmarking against similar services. According to LECG, if full UCLL services are considered similar to sub-loop UCLL services, then the sub-loop price should be equal to the full UCLL price.[422]

879. LECG noted that very different data sets are used for calculating the ratio of Sub-loop MPF/UCLL MPF prices and the full UCLL MPF price to which the ratio is applied. As a result, LECG argued that the Commission's approach in the draft STD is technically incorrect. LECG noted that the Commission raises the issue of inconsistent datasets in the draft STD, when referring to the 6 comparable jurisdictions with Sub-loop MPF rates, out of the 10 comparable jurisdictions used in the UCLL STD.

880. Using the approach taken by the Commission in the UCLL STD, LECG submitted that the correct Sub-loop MPF prices are $20.00 per month (averaged), and $15.38 per month in urban areas and $32.35 per month in non-urban areas.[423]

Telecom (Group)

881. Telecom (Group) submitted that the reasons given in the draft STD for departing from the benchmarking approach used for the full UCLL service are not

[420] LECG, *Price benchmarking of sub-loop UCLL, backhaul and co-location services*, 14 October 2008, paragraph 29.
[421] ibid, paragraph 37.
[422] ibid, paragraph 44.
[423] ibid, paragraph 46.

sufficient. For example, while the Commission noted that data on sub-loop prices was available in only 6 of the 10 comparable jurisdictions identified in the UCLL STD, the Commission uses only one benchmark for the sub-loop backhaul service.[424]

882. Telecom (Group) supported the benchmarking approach proposed by LECG, namely to apply the same methodology used in the UCLL STD. According to Telecom (Group), LECG's approach would result in sub-loop UCLL prices that are consistent with the full UCLL benchmarks and with the IPP in the Act.[425]

Covec

883. Covec noted that the benchmarking approach in the draft STD, where the relativity between Sub-loop UCLL and full UCLL prices is used, relies on an assumption that the factors that drive this relativity are similar in New Zealand and other jurisdictions. Covec submitted that the relative length of the sub-loop and the full loop is important, and referred to the example in the draft STD, where the relative sub-loop and full loop length in Germany appears to be similar to that in New Zealand.[426]

884. Covec also observed that in the US, where rates are de-averaged, the ratio of sub-loop price to full loop price does not vary significantly across different zones, in spite of the expectation that full loops in lower density zones would have a longer length. According to Covec, this provides further support for the Commission's approach.[427]

885. Covec submitted that the distribution of Sub-loop MPF/UCLL MPF ratios is relatively tight, with a lower quartile of 51% and an upper quartile of 70%.[428]

886. Covec concluded that the Commission's approach is pragmatic, given the constraints on the dataset imposed by comparability criteria, and that the Commission's use of a large dataset is appropriate.

887. According to Covec, the Commission's focus on relativity between Sub-loop Services and the full UCLL service is important, as the two sets of services are substitutes from the point of view of Access Seekers. As a result, relative access prices that reflect relative access costs will promote efficient use of alternative access products.

Vodafone

888. Vodafone submitted that the Sub-loop UCLL price will be a proportion of the full UCLL price, and that the Commission's proposed 60.4% is reasonable according to international benchmarking under the IPP.

---

[424] Telecom (Group), *Submission on draft Sub-loop Services STD*, 15 October 2008, paragraph 59.
[425] ibid, paragraph 62.
[426] Covec, *Submission: Access to Sub-loop Services*, 15 October 2008, page 5.
[427] ibid, page 6.
[428] ibid, page 6.

Orcon/Kordia/CallPlus

889. In a joint submission on the draft STD, Orcon/Kordia/CallPlus agreed with the position taken in the draft STD, that the Sub-loop UCLL price should be lower than the full UCLL price. This is because the cost to trench a 0.5 km line is much lower than that for a 3 km line.[429] They supported the Commission's benchmarking of the proportion of Sub-loop MPF/UCLL MPF rates, as well as the Commission's consideration of relativity between the Sub-loop UCLL and full UCLL services (and hence the UBA service).[430]

Sub-loop UCLL Service – Cross-submissions

LECG

890. LECG's cross-submission responded to the Covec submission on the draft STD. Covec had noted that the distribution of ratios of Sub-loop MPF/UCLL MPF prices was relatively tight, with the ratio not varying excessively across jurisdictions. It was noted by Covec and in the draft STD that the median ratio in US urban zones was similar to the median ratio in rural zones. In response, LECG argued that there is considerable variation in the Sub-loop MPF/UCLL MPF price ratios across the US price zones. According to LECG, in more than half of the US states, the range of ratios across price zones is greater than 10%; in 6 of the 28 states, the range is greater than 20%.[431]

891. LECG submitted the results of some further regression analysis, which it claimed shows that the comparability criteria used by the Commission in the UCLL STD influences the Sub-loop MPF/UCLL MPF price ratios as well as sub-loop prices themselves. As a result, LECG argued that the Commission should follow the comparability approach used in the UCLL STD.[432]

Professor Hausman

892. Professor Hausman's cross-submission responded to Covec's submission, arguing that Covec is incorrect in claiming that sub-loop and UCLL access are substitutes from the point of view of Access Seekers. In any given area, Access Seekers will be able to access either the sub-loop UCLL service or the full UCLL service, but not both.[433]

Covec

893. Responding to Telecom's argument that the Sub-loop UCLL prices are too low and overlook the additional speed and quality benefits supported by Telecom's new investment, Covec agreed that such benefits exist, but argued that such benefits do not necessitate a high access price. Rather, there are opportunities

[429] Orcon, Kordia, CallPlus, *Submission on draft Sub-loop Services STD*, 15 October 2008, paragraph 34.
[430] ibid, paragraphs 34 to 36.
[431] LECG, *Price benchmarking of sub-loop UCLL, backhaul and co-location services*, 14 October 2008, paragraph 13.
[432] ibid, paragraphs 18 to 29.
[433] Professor Hausman, Cross-*submission on draft Sub-loop Services STD*, 30 October 2008, paragraph 6.

for Telecom and Access Seekers to capture some of the benefits through providing new services.[434]

894. Covec provided results of their regression-based modelling, which show very similar results to the Commission's.[435] Covec found a statistically significant relationship between sub-loop and full loop rates in the Commission's dataset, estimating a Sub-loop MPF/UCLL MPF price ratio of 58.6% (compared to the Commission's 60.4%). When LECG's dataset incorporating US state average rates is used, Covec estimated a ratio of around 62%.

895. Covec also submitted that despite LECG's argument to the contrary, there does not appear to be a statistically significant difference in Sub-loop MPF/UCLL MPF proportions, between the subset of comparable countries used in the UCLL STD, and other jurisdictions.[436]

Sub-loop Co-location Service - Submissions

Telecom (Chorus)

896. Telecom (Chorus) submitted that there is insufficient information to determine a benchmarked price for the Sub-loop Co-location Service. As a result, Telecom (Chorus) supported the approach taken in the draft STD.

897. Telecom (Chorus) commented on several aspects of the way in which the Commission determined a co-location price in the draft STD. These related to the following:

- the annualisation method used in the draft STD;
- the economic life of a Distribution Cabinet;
- the required rate of return;
- operational costs; and
- Distribution Cabinet costs.

898. Telecom (Chorus) submitted that the annualisation method used in the draft STD differs from that proposed in the STP. Telecom (Chorus) agreed that the annualisation method used for the TSO and the draft STD should be adopted.[437]

899. According to Telecom (Chorus), the information it previously provided to the Commission (indicating a 20 year life of a cabinet) was incorrect, and represented the physical as opposed to economic life of the cabinet. Telecom (Chorus) submitted that the economic life of a cabinet is 10 years, as fibre-to-the-home will make FTTN investment obsolete, as there will be no sub-loop co-

[434] Covec, *Cross-submission: Access to Sub-loop Services*, 30 October 2008, page 10.
[435] ibid, pages 14 to 17.
[436] ibid, page 17.
[437] Telecom (Chorus), *Submission on draft Sub-loop Services STD*, 15 October 2008, paragraph 234. Telecom (Chorus) noted that it had set the price tilt factor to zero and that it was undertaking further work on this issue.

location service available with FTTH, and the cabinets will not represent "optimal locations" for a FTTH network.[438]

900. Telecom (Chorus) also submitted that the 10% cost of capital used in the draft STD to annualise the cabinet cost is too low. Telecom requires its Chorus business unit to earn an average 11.3% post-tax return, and refers to "other jurisdictions" where risk premiums of up to 15% are allowed for fibre and Distribution Cabinet investments.

901. Telecom (Chorus) submitted that the draft STD omits any allowance for opex, and that in the TSO context, the Commission allows an opex mark-up of 12% applied to the annualised capital costs. Telecom (Chorus) proposed the inclusion of the 12% mark-up on the annualised capital costs of cabinets to reflect opex.

902. According to Telecom (Chorus), the aggregate effect of its proposed changes to the economic life, cost-of-capital, and opex parameters (and a 0.5 year time-to-build factor consistent with the TSO), results in an average cabinet cost of $1,357 per month.[439]

903. Later in its submission, Telecom (Chorus) argued that the average cost per Distribution Cabinet may need to be increased to take account of the costs incurred by Telecom in transferring lines from existing passive cabinets to the new active Distribution Cabinets.[440]

LECG

904. LECG considered the approach taken by the Commission in the draft STD in respect of Sub-loop Co-location to be reasonable.[441]

Telecom (Group)

905. Telecom (Group) agreed in principle with the approach taken in the draft STD on cabinet co-location, but referred to the Telecom (Chorus) submission that the economic life of a cabinet is 10 years,[442] and that the appropriate cost of capital has a "lower bound" of 11.3%, which is comprised of a weighted average cost of capital of 9.3% and an increment of 2%. According to Telecom (Group), the latter is a conservative margin to account for factors such as the growing risk of access competition with cellular technologies and the opportunity cost of alternative investments.[443]

Covec

906. Covec noted that in respect of cabinet co-location, the draft STD departed from the strict definition of international benchmarking, by instead examining the

[438] Telecom (Chorus), *Submission on draft Sub-loop Services STD*, 15 October 2008, paragraph 239.
[439] ibid, paragraph 249.
[440] ibid, paragraph 302.1.
[441] LECG, *Price benchmarking of sub-loop UCLL, backhaul and co-location services*, 14 October 2008, paragraph 66.
[442] Telecom (Group), *Submission on draft Sub-loop Services STD*, 15 October 2008, paragraph 67.
[443] ibid, paragraphs 68 to 70.

process for setting co-location prices in other jurisdictions, while setting actual co-location prices based on cabinet cost information supplied by Telecom (Chorus). Covec stated that: [444]

> it is not entirely clear from the draft STD whether this is due to a lack of data from other jurisdictions, or for some other reasons.

907. Regarding the annualisation of cabinet costs, Covec agreed with the Commission's approach, although noted that a more precise way to convert cabinet costs into a monthly price would be to use a monthly discount rate,[445] and monthly periods, rather than using annual values and then dividing the resulting annual cost by 12 months. According to Covec, the monthly cost declines slightly, from the $635 per month in the draft STD, to $626 per month.[446]

908. Covec agreed with the use of a flat annuity (rather than a tilted annuity), and also agreed with varying cabinet power infrastructure charges to suit local conditions (such as whether a transformer is required).

909. Covec generally agreed with the approach in the draft STD of pro-rating the average cabinet cost, based on the number of rack units used. Covec also considered the draft's approach of combining pedestal costs with the original cabinet cost (where a pedestal is required due to a lack of space in the cabinet), and pro-rating across all users of the cabinet and pedestal, to be reasonable.

Vodafone

910. Vodafone generally accepted the approach taken in the draft STD in respect of the Sub-loop Co-location Service.

Orcon/Kordia/CallPlus

911. According to Orcon, Kordia and CallPlus, the cost of a double bay Distribution Cabinet appears to be similar to a Single Bay cabinet, and so the former should be deployed to increase the potential for competition.[447]

Sub-loop Co-location Service – Cross-submissions

Telecom (Chorus)

912. Telecom (Chorus) recommended an economic life for Distribution Cabinets of 10 years, based on FTTH deployments in other countries. According to Telecom (Chorus), FTTH roll-out timeframes in other countries are 5-8 years (Japan, South Korea, Hong Kong, Sweden, Singapore, Denmark, the Netherlands).

---

[444] Covec, *Submission: Access to Sub-loop Services*, 15 October 2008, page 9.
[445] Covec use 10%/12 or 0.83% per month. In a submission following the conference, Covec noted that this does not take account of interest rate compounding, which would reduce the monthly cabinet rental. Covec, *Sub-loop Co-location Rental Calculations*, 16 December 2008.
[446] This is based on a 20-year cabinet life (240 months).
[447] Orcon, Kordia, CallPlus, *Submission on draft Sub-loop Services STD*, 15 October 2008, paragraph 38.

Covec

913. Covec commented on Telecom's proposed adjustments to the cabinet co-location prices, including the relevant cost of capital and the inclusion of a 12% mark-up for opex. According to Covec, the most transparent method of recovering the costs associated with repairing damaged cabinets is to do so on an ex post basis. In respect of ongoing cabinet maintenance, Covec submitted that any mark-up should be based on a detailed examination of necessary maintenance to ensure that relevant costs are not over-recovered.[448]

Orcon/Kordia/CallPlus

914. Orcon, Kordia and CallPlus argued that the economic life of a Distribution Cabinet is likely to be (at least) 20 years, as it will take a substantial amount of time before FTTN is superseded by FTTH, and even when this happens, FTTH will still involve existing fibre between the cabinet and the Exchange, and hence the cabinets will be used to aggregate distribution fibres.[449]

Sub-loop Backhaul Service - Submissions

Telecom (Chorus)

915. Telecom (Chorus) proposed an "Ethernet Sub-loop Backhaul Service using media converters or 7450s to constrain and price transmission capacity by bandwidth" (100Mbps or 1Gbps proposed in the STP),[450] and submitted that this is consistent with the UCLL Backhaul Service in the Commission's previous determination.

916. Telecom (Chorus) submitted that the Sub-loop Backhaul Service proposed in the draft STD is dark fibre, with either Telecom or the Access Seekers providing the SFPs to light the fibre.[451] According to Telecom (Chorus), this is not transmission capacity as defined in the Act.[452]

917. Telecom (Chorus) argued that the concerns expressed by the Commission in the draft STD over the economics of Sub-loop Backhaul are better addressed by offering backhaul at additional bandwidths of 25 and 50Mbps. According to Telecom (Chorus), this would meet the requirements of a range of Access Seekers, including those wishing to adopt specialised or mass marketing strategies.[453]

918. Telecom (Chorus) disagreed with the draft STD's use of a "price cap" whereby the sum of the sub-loop prices is capped by the full UCLL price. According to

[448] Covec, *Cross-submission: Access to Sub-loop Services*, 30 October 2008, page 19.
[449] Orcon, Kordia, CallPlus, *Cross-submission on draft Sub-loop Services STD*, 31 October 2008, paragraph 40.
[450] Telecom (Chorus), *Submission on draft Sub-loop Services STD*, 15 October 2008, paragraph 146.
[451] At paragraph 153, Telecom (Chorus) noted that it would not be able to provide the SFPs, meaning the Access Seekers would have to provide their own SFPs under the approach in the draft STD.
[452] Telecom (Chorus), *Submission on draft Sub-loop Services STD*, 15 October 2008, paragraphs 161-170.
[453] ibid, paragraphs 171-175.

Telecom (Chorus), there is no mandate for such an arbitrary cap.[454] Telecom (Chorus) also claimed that such a cap means that:[455]

> ... the Commission is effectively benchmarking the fibre based Sub-loop Backhaul service against the copper UCLL service. Again, this is not a similar service.

919. Telecom (Chorus) submitted that the Sub-loop Backhaul Service and the UCLL Backhaul Service are equivalent,[456] and that the same pricing methodology should be used in both cases. Telecom (Chorus) submitted that the Commission appears to have considered UCLL backhaul pricing, but departed from it on the basis that the resulting prices are too high relative to the UCLL cap.

920. Telecom (Chorus) argued that notwithstanding its view that the Commission's UCLL cap is inappropriate, the cap would be satisfied if the Commission were to use more reasonable assumptions about the number of End Users that could be served per link (i.e., more reasonable contention ratios).[457] Whereas the Commission assumed an average 10Mbps per End User, and a contention ratio of 5.0 (equivalent to a real-time class of service of 2Mbps per End User), Telecom (Chorus) submitted that a more appropriate assumption is between 72kbps and 212kbps, based on the specification of the Enhanced UBA service.

921. Using an upper bound (of the Enhanced UBA service) of 212kbps,[458] Telecom (Chorus) submitted that a 100Mbps backhaul service could support around 550 End Users.[459] Following the comparisons made by the Commission in the draft STD, the higher number of End Users per link results in a lower backhaul cost per End User, such that the combination of the Sub-loop UCLL price and the Sub-loop Backhaul price per End User is close to the UCLL price.

<u>LECG</u>

922. LECG also commented on the approach taken in the draft STD in determining a price for the Sub-loop Backhaul Service.[460] LECG characterised the approach in the draft STD as a partial cost building block approach, which it claimed is inconsistent with the IPP. According to LECG, the approach proposed by the Commission in the draft STD is "partial" in the sense that the Commission has not taken into account all of the costs that would be incurred to provide the service, such as the use of 'media converters' in the local Exchange, tie cables, and no contribution to common costs.

923. LECG argued that the draft STD used a service description that is based on dark fibre, which is inconsistent with the service description in the Act and the service descriptions used by the Commission in previous backhaul determinations.

---

[454] Telecom (Chorus), *Submission on draft Sub-loop Services STD*, 15 October 2008, paragraph 216.
[455] ibid, paragraph 219.
[456] ibid, paragraph 220.
[457] ibid, paragraphs 223-228.
[458] The sum of the real-time class of service (up to 180kbps) and the internet class of service (32kbps).
[459] Telecom (Chorus)'s table (page 46 of its submission) indicates that a 100Mbps backhaul service could support 472 End Users.
[460] LECG, *Price benchmarking of sub-loop UCLL, backhaul and co-location services*, 14 October 2008, paragraphs 53 to 60.

924. LECG concluded that the full UCLL backhaul and Sub-loop Backhaul service descriptions in the Act are equivalent for the purposes of benchmarking, and therefore the previous benchmarking methodology used by the Commission for the UCLL/UBA backhaul services should be used for Sub-loop Backhaul.

Vector

925. Vector submitted that the Commission needs to be mindful of the investment environment in which it is setting regulated prices, and that the terms in the draft STD will deter investment.[461]

926. Vector submitted that the draft STD proposes the regulation of dark fibre rather than transmission capacity. According to Vector, dark fibre is not transmission capacity, and hence the draft STD is inconsistent with the Act.

927. According to Vector, the draft STD's dark fibre benchmarks are too low, are not robust, and do not reflect commercial realities, undermining incentives to invest in fibre.[462] Vector would not be able to provide a monthly lease of a 2.5 km fibre at the price set in the draft STD, and believe they face similar fibre, trenching, and labour costs as Telecom. Vector submitted that it would cost them $**[ ] VLCOI** to install 2.5 kms of trenched fibre, and that the price in the draft STD would have to increase **[ ] VLCOI**-fold in order to justify such an investment. Vector noted that the Commission's relativity analysis in Table 7 of the draft STD also indicates the backhaul price is too low, and that if the Commission is to retain its relativity approach, the backhaul benchmarks in the draft STD should be adjusted upwards.[463]

928. Vector instead supported the use of the UCLL backhaul pricing methodology (unless an alternative bandwidth-based set of benchmarks for sub-loop backhaul can be identified), with commercially available bandwidth-based backhaul prices used as a cross-check. Vector argued that the UCLL backhaul pricing should be modified to take account of the equipment differences identified by the Commission in the draft STD, for example the use of SFPs to supply Sub-loop Backhaul Services.

929. Vector argued that the relativity consideration in the draft STD has led to the inappropriate exclusion of potentially useful sources of information on backhaul prices (such as the UCLL backhaul methodology, and the use of KPN backhaul prices).[464]

930. Vector argued the median ratio of Sub-loop MPF/UCLL MPF prices should not necessarily be taken, especially given a range from 17% to 91%. Vector proposed three ways in which the Commission's benchmarking could be improved: improved use of criteria relating to "similar services", "comparable countries" and "forward-looking cost-based pricing"; adjustments for the "local context", such as differences in geography, terrain, taxes, property prices, OECD communications and labour PPP rates; and sanity checking against local

[461] Vector, *Submission on draft Sub-loop Services STD*, 15 October 2008, paragraph 11.
[462] ibid, paragraph 71.
[463] ibid, paragraph 78.
[464] ibid, paragraph 48.

commercial services, especially in the case of backhaul (where overseas benchmarks are limited).[465]

Covec

931. Covec recognised that the benchmarking dataset for Sub-loop Backhaul appears to be very limited.

932. According to Covec, the regression-based pricing approach used in the UCLL/UBA Backhaul STDs would be difficult to apply, as the distances involved with Sub-loop Backhaul (with an average distance of 2.5 kms) are significantly different from those used for UCLL/UBA Backhaul (with an average distance of 114 km, and a shortest distance of 15 kms).[466]

933. Covec claimed that regression models generally perform poorly at generating estimates for conditions that are very different from the data used to estimate the model. Covec calculated a 95% confidence interval on a per End User basis for a 100Mbps backhaul service ($9.42-$39.47) and a 1Gbps backhaul service ($8.10-$30.12) over 2.5 kms, and concluded that the large intervals suggest estimates for a 2.5 km distance are imprecise. Accordingly, Covec submitted that the application of the regression approach is not appropriate for Sub-loop Backhaul.[467]

934. Covec also agreed with the draft STD that benchmarking against the KPN sub-loop backhaul service in the Netherlands is not appropriate, due to the large adjustment required for different distances.[468]

935. Covec noted that the Commission's benchmarking in the draft STD relies on a single observation of a fibre price in Germany, but submitted that there do not appear to be any other options in this case.

Vodafone

936. Vodafone noted that the Sub-loop Backhaul price is less well-supported by benchmarking, but also noted that Telecom has the option of requesting a review under the Final Pricing Principle. According to Vodafone, the prices set in the draft STD still require an Access Seeker to obtain a 30%-50% market share of a cabinet area in order for the Sub-loop Services to be economically viable.[469]

Orcon/Kordia/CallPlus

937. Orcon, Kordia and CallPlus also submitted that the Sub-loop Backhaul Service is fundamentally different from the UCLL Backhaul Service, as the Sub-loop Backhaul Service involves very short distances and small customer numbers.[470] They supported the draft STD's approach of benchmarking the components of the Sub-loop Backhaul Service, using fibre-link benchmarks as this best reflects

[465] Vector, *Submission on draft Sub-loop Services STD*, 15 October 2008, paragraphs 50 to 52.
[466] Covec, *Submission: Access to Sub-loop Services*, 15 October 2008, page 10.
[467] ibid, p 11.
[468] ibid.
[469] Vodafone, *Submission on draft Sub-loop Services STD*, 15 October 2008, paragraph 10.
[470] Orcon, Kordia, CallPlus, *Submission on draft Sub-loop Services STD*, 15 October 2008, paragraph 44.

the nature of the service. They submitted that a wholesale fibre-link service that allows for a fair rate of return will not preclude efficient competition for sub-loop backhaul.

TelstraClear

938. TelstraClear expressed some concern that the draft STD's definition of the Sub-loop Backhaul Service as a point-to-point SFP-based service departed from the TCF working party's unanimously agreed definition of an Ethernet-based 100Mbps or 1Gbps service.[471]

939. TelstraClear submitted that the draft STD's definition is likely to be "more statically efficient" but may not be consistent with "broader dynamically efficiency [sic] outcomes",[472] and implied that the draft creates a risk that network deployment may be discouraged.

Sub-loop Backhaul Service – Cross-submissions

Telecom (Chorus)

940. Telecom (Chorus) agreed with Telecom (Group), TelstraClear, and Vector, that the Sub-loop Backhaul Service should be an Ethernet-based service.

LECG

941. LECG commented on Covec's claims that the UCLL backhaul pricing model produces unreliable results for short distances. LECG disagreed with Covec, on the basis that a number of the backhaul services used in the UCLL backhaul benchmarking (such as the UK) were for relatively short distances (i.e.,0-15, 20 km). In addition, LECG noted that the regression model used for UCLL backhaul includes a distance variable that produces a price for short distances (and was in fact applied to short distances that are similar to the sub-loop backhaul distance of 2.5 km). LECG also submitted that while Covec discards the UCLL backhaul model on the basis that it generates prices for short distances with wide confidence intervals, the approach taken in the draft STD is based on a single benchmark to which a confidence interval cannot be applied.[473]

Vector

942. Vector's cross-submission emphasised the importance of maintaining incentives for investment, submitting that the backhaul prices in the draft STD would undermine competing fibre investment.[474]

943. Vector supported the use of an Ethernet-based Sub-loop Backhaul Service, as this aligns with the Act. Vector also submitted that the additional bandwidth

[471] TelstraClear, *Submission on draft Sub-loop Services STD*, 15 October 2008, paragraphs 15 to 17.
[472] ibid, para 25.
[473] LECG, *Price benchmarking of sub-loop UCLL, backhaul and co-location services*, 14 October 2008, paragraphs 36 to 45.
[474] Vector, *Cross-submission on draft Sub-loop Services STD*, 31 October 2008, paragraph 3.

options offered by Telecom (Chorus) (such as the new 25Mbps and 50Mbps) would address any concerns over the viability of using the service.[475]

944. In commenting on Covec's confidence intervals analysis, Vector responded that there is no confidence interval for the Commission's fibre benchmark, as it is based on a single observation.[476] Vector preferred the use of a benchmark dataset with a wide confidence interval, over a single data-point with no statistical confidence.

945. Vector also noted that the UCLL backhaul pricing was applied over short Exchange-NAPOI distances (0-5 kms), and therefore questioned why it cannot be applied to short distances for Sub-loop Backhaul.

Vodafone

946. Vodafone supported the provision of Sub-loop Backhaul as a point-to-point SFP-based service, as this will provide flexibility and the greatest opportunity for innovation. Vodafone agreed with Telecom's view that it is not appropriate for Telecom to provide SFPs to Access Seekers. Vodafone's preference would be to provide its own SFPs.

Covec

947. Covec provided some analysis of the accuracy of using the UCLL backhaul pricing methodology to set Sub-loop Backhaul prices.[477] According to Covec, the UCLL backhaul model produces relatively inaccurate prices (as measured by confidence intervals) for short distances, with this inaccuracy increasing exponentially as distance decreases.

Orcon/Kordia/CallPlus

948. Orcon, Kordia and CallPlus argued that the Sub-loop Backhaul Service description in the draft STD is consistent with the Act, as the Act refers to "a service...that provides transmission capacity", and in their view, dark fibre provides transmission capacity. In addition, Orcon, Kordia and CallPlus noted that the Act describes transmission capacity as a service that *is* copper, fibre, or anything else, and that the service description in the draft STD is therefore consistent with the service description in the Act.[478]

949. Orcon, Kordia and CallPlus submitted that the Sub-loop Backhaul Service is not comparable to the long-distance backhaul service from the Exchange to points of interconnection and that a different pricing approach from that used for UCLL backhaul is therefore justified.

[475] Vector, *Cross-submission on draft Sub-loop Services STD*, 31 October 2008, paragraph 12.
[476] ibid, paragraph 19.
[477] Covec, *Cross-submission: Access to Sub-loop Services*, 30 October 2008, pages 19 and 20.
[478] Orcon, Kordia, CallPlus, *Cross-submission on draft Sub-loop Services STD*, 31 October 2008, paragraphs 10 and 11.

950. According to Orcon, Kordia and CallPlus, the 212kbps per customer used in the Telecom (Chorus) submission may be significantly too low, depending on the type of services offered by the Access Seekers.

TelstraClear

951. In its cross-submission, TelstraClear remained concerned about the draft STD's approach to Sub-loop Backhaul, in particular that it departs from the unanimous TCF working party agreement and focuses on static efficiency rather than wider dynamic efficiency considerations.[479]

952. TelstraClear supported Vector's analysis that the Sub-loop Backhaul Service should be treated consistently with UCLL backhaul and UBA backhaul.[480]

Relativity - Submissions

Telecom (Chorus)

953. Telecom (Chorus) submitted that the draft STD errs in its treatment of the statutory requirement to consider relativity.[481] Telecom (Chorus) noted that the Commission has already considered relativity in the UCLL/UBA context, and argued that the Commission should take a consistent approach to the Sub-loop UCLL/UBA relativity. This would involve setting a Sub-loop UCLL price according to the same methodology used to set the UCLL price and with no artificial constraints; retaining the UBA discount; and addressing any outstanding relativity concerns between Sub-loop UCLL and UBA in a separate process to consider naked UBA.

954. According to Telecom (Chorus), the draft STD misrepresents the relativity established in the UBA STD. Telecom (Chorus) argued that:[482]

> It is not the case that "the relativity between the UCLL service and UBA service was assessed on the basis of relative cost." This is what the Draft STD proposes as between Sub-loop UCLL and UCLL, but it is not the relativity established between UCLL and UBA. It cannot be, because UBA is priced on a retail-minus basis. As discussed above, the prices of UCLL monthly rental and UBA were benchmarked independently of each other. The relativity is addressed by the uplift for naked UBA.

955. Telecom (Chorus) submitted that by requiring a cost relativity between the Sub-loop UCLL and UCLL services, the draft STD has not established the statutory relativity condition between the Sub-loop UCLL and UBA service. Telecom (Chorus) claimed that to do this, the Commission must set the Sub-loop UCLL price via benchmarking with no artificial constraints.[483]

---

[479] TelstraClear, *Cross-submission on draft Sub-loop Services STD*, 31 October 2008, paragraph 12.
[480] ibid, paragraph 15.
[481] Telecom (Chorus), *Submission on draft Sub-loop Services STD*, 15 October 2008, paragraph 183.
[482] ibid, paragraph 189.
[483] ibid, paragraph 190. See also Telecom (Chorus) presentation at the Commission's conference, *Sub-loop Services Conference: Day Two Chorus Presentation Notes*, Tab 1.

Telecom (Group)

956. Telecom (Group) argued that in a competitive market, a firm would not upgrade its facilities (such as Telecom is doing with its FTTN investment) unless it is able to recover its costs, including its opportunity costs (including any extinguished real options), and yet the Commission's proposed approach in the draft STD prevents this.[484]

957. Telecom (Group) argued that the draft STD's presumption that the cost structures of the sub-loop UCLL and backhaul services align with the cost structures of the full UCLL service is incorrect, due to differences in utilisation, as well as differences in factors such as the respective cost of capital (which according to Telecom will be higher for the Sub-loop Services), asset lives, and operating costs.[485]

LECG

958. LECG submitted that under the IPP, the Commission's benchmarking must define the service to be benchmarked, identify comparable countries that use forward-looking cost-based pricing, identify prices for similar services in those countries, and derive a benchmarked price from the set of prices identified.[486]

959. LECG submitted that the Commission's draft STD for the Sub-loop Services did not follow its previous benchmarking methods, because of data limitations in respect of sub-loop prices, and due to the Commission's view that the sum of the sub-loop UCLL price and the sub-loop backhaul price should be no greater than the full UCLL price.[487]

960. LECG characterised the Commission's "price cap" as being self-imposed, and made the following comments on the justification for such a cap:[488]

- on the Commission's view that the price cap is necessary to achieve efficient entry decisions – LECG argued that the decision whether to use sub-loop UCLL or full UCLL is made by Telecom as part of its FTTN programme, and not by the entrant;
- on the Commission's view that the cap is appropriate as costs are dominated by trenching – LECG submitted that this may be appropriate under the Final Pricing Principle, but that it is not appropriate to override the benchmarking requirement of the IPP; and
- on the Commission's view that the cap ensures relativity – LECG claims this "may or may not work", and that the Commission should look at other ways of addressing the relativity requirement.

[484] Telecom (Group), *Submission on draft Sub-loop Services STD*, 15 October 2008, paragraphs 33 and 34.
[485] ibid, paragraphs 51 to 55.
[486] LECG, *Price benchmarking of sub-loop UCLL, backhaul and co-location services*, 14 October 2008, paragraph 14.
[487] LECG refer to this as a "price cap".
[488] LECG, *Price benchmarking of sub-loop UCLL, backhaul and co-location services*, 14 October 2008, paragraphs 20 to 23.

961. According to LECG, the Commission has assumed that the full UCLL price is correct and that the price cap should be determined relative to it, rather than for example setting the cap relative to the benchmarked Sub-loop UCLL and Backhaul prices.

Vector

962. Vector argued that the Commission's consideration of relativity ignores the fact that relativity is not part of the Sub-loop Backhaul Service, nor does it take into account the enhanced non-price (i.e., bandwidth and quality) features that result from Telecom's fibre investment. According to Vector, relativity can be applied to the MPF portion of the sub-loop (using the benchmarked proportions approach in the draft STD), but that the remaining feeder proportion should not be applied explicitly or implicitly to the sub-loop backhaul benchmarking.[489]

963. According to Vector, the correct approach to considering relativity is to first consider relativity between the full UCLL and UBA services. If this relativity is satisfied, then by definition, relativity must also be satisfied between the Sub-loop UCLL Service, as long as the Sub-loop UCLL price is below the full UCLL price. According to Vector, relativity could also be satisfied even were the sub-loop UCLL price to end up above the full UCLL price, once the enhanced quality and capacity of Sub-loop Services is taken into account.[490]

Covec

964. Covec supported the approach taken in the draft STD comparing the sub-loop UCLL price and sub-loop backhaul price with the full UCLL price. However, Covec submitted that the relative co-location costs should also be taken into account. Covec acknowledged that this would be somewhat complex due to differences in equipment and space requirements at the cabinet versus the Exchange.

Professor Hausman

965. In a submission on behalf of Telecom (Group), Professor Hausman argued that the Commission's requirement that the sum of the sub-loop UCLL and sub-loop backhaul price be no greater than the full UCLL price is fundamentally incorrect from an economic viewpoint, as it takes no account of the higher risk associated with next generation networks compared to the risks inherent in a legacy copper-based network.[491]

Vodafone

966. Vodafone argued that if the combined cost of Sub-loop Services (including backhaul from the cabinet to the Exchange) is not comparable to the Exchange-based UCLL service, then efficient Access Seekers will be unable to compete in a growing sector of the market that is expected to account for 50% of lines

[489] Professor Hausman, Cross-*submission on draft Sub-loop Services STD*, 30 October 2008, paragraph 38.
[490] ibid, paragraph 42.
[491] ibid, paragraph 6.

within three years.[492] According to Vodafone, the Sub-loop Backhaul price should be no greater than the copper feeder proportion of the full UCLL service, and the Commission has had regard to the importance of ensuring relativity between sub-loop UCLL and full Exchange UCLL services.

Orcon/Kordia/CallPlus

967. Orcon, Kordia and CallPlus supported the requirement that the combined sub-loop UCLL and Sub-loop Backhaul price be no greater than the full UCLL price, as this will ensure efficient entry and promote competition in accordance with section 18 of the Act.[493]

Relativity – Cross-submissions

Telecom (Group)

968. Telecom (Group) claimed there is no principled reason why the sum of the sub-loop prices should be less than the full UCLL price. Telecom (Group) questioned why it should invest hundreds of millions of dollars and receive less revenue than before.

969. Telecom (Group) claimed that in the UCLL STD, the Commission considered that should the median UCLL price be too low, this would spur Telecom to invest in fibre. Telecom (Group) argued that the Commission is now undermining this by the proposed 'price cap' and pricing methodology in the draft STD. If Telecom is unable to earn a reasonable return on UCLL, then the imposition of the Commission's UCLL price cap will prevent Telecom from earning a reasonable return on its FTTN investment.[494]

Telecom (Chorus)

970. Telecom (Chorus) argued that none of the submissions that supported the cap have provided any principled foundation for such support.[495]

Professor Hausman

971. Professor Hausman also noted that if the combined Sub-loop UCLL and Sub-loop Backhaul prices exceed the full UCLL price, this will be due to higher Sub-loop Co-location costs and connection costs.

Vector

972. Vector argued that relativity should not be extended to the Sub-loop Backhaul Service. In addition, Vector supported the benchmarking of sub-loop *prices*, rather than proportions, on the basis that it considered that this is what the IPP requires.[496]

---

[492] Vodafone, *Submission on draft Sub-loop Services STD*, 15 October 2008, paragraph 8.
[493] Orcon, Kordia, CallPlus, *Submission on draft Sub-loop Services STD*, 15 October 2008, paragraph 42.
[494] Telecom (Group), *Cross-submission on draft Sub-loop Services STD*, 31 October 2008, paragraph 30.
[495] ibid, paragraph 77.
[496] Vector, *Cross-submission on draft Sub-loop Services STD*, 31 October 2008, paragraph 7.

973. In responding to submissions by Vodafone and Covec on the importance of ensuring consistency between Exchange and cabinet-based services, Vector argued that cabinetisation will enable the provision of new higher-bandwidth services. As a result, Vector submitted that any price differential between the full UCLL service and the Sub-loop Services should be permitted where such a differential reflects the additional costs associated with cabinetisation (such as cabinet costs, capacity-based backhaul prices, and associated equipment costs that are not part of the full UCLL service).[497]

Vodafone

974. According to Vodafone, relativity is important, including relativity between wholesale and retail prices. Under EOI, Telecom (Wholesale) will purchase Sub-loop UCLL from Telecom (Chorus) and resell it to Access Seekers as UBA, hence the pricing of the whole set of Sub-loop Services should be at a suitable margin below UBA (allowing for the additional investment required to convert the Sub-loop UCLL service into a wholesale bitstream service).

Covec

975. Covec maintained its view that relativity between the Sub-loop UCLL and backhaul services and the full loop service is important, as the combination of Sub-loop UCLL and Sub-loop Backhaul is a similar service to full UCLL. This relativity is also important in the case of dual-feed cabinets, in which case Access Seekers can install equipment at either the Exchange or cabinet.[498]

976. Regarding Professor Hausman's argument that the Commission cannot compare the sub-loop UCLL and backhaul services against the full-loop service, as such a comparison takes no account of different risks, Covec replied that such risk differentials are likely to have been taken into account in the benchmarks used by the Commission. On Professor Hausman's arguments regarding delay options, Covec argued that Telecom extinguished any such options when it committed to cabinetisation under the separation undertakings.[499]

Orcon/Kordia/CallPlus

977. Orcon, Kordia and CallPlus submitted that the draft STD's approach is appropriate in that it focuses on the actual costs of the FTTN network, and the draft's prices are likely to be very similar to those that are likely to result from a TSLRIC exercise under the FPP. They argued that the combination of the Sub-loop UCLL and Sub-loop Backhaul Services is very similar to the full UCLL service, in that both allow Access Seekers to connect End Users to network infrastructure located in the Exchange. The Commission is therefore correct to compare these services.[500]

[497] Vector, *Cross-submission on draft Sub-loop Services STD*, 31 October 2008, paragraphs 8 and 9.
[498] Covec, *Cross-submission: Access to Sub-loop Services*, 30 October 2008, pages 10 and 11.
[499] ibid, page 13.
[500] Orcon, Kordia, CallPlus, *Cross-submission on draft Sub-loop Services STD*, 31 October 2008, paragraphs 34, 35 and 39.

Connection Charges

Covec

978. Covec agreed with the draft STD that per-line connection charges will be higher for the Sub-loop UCLL service than for full UCLL, but submitted that Telecom (Chorus) is likely to organise 'batch' service visits to cabinets in order to maximise the efficiency of its technicians.

979. Covec noted that there is greater variability in the ratio of sub-loop connection charges to full UCLL connection charges,[501] raising some concerns over the reliability of estimates and underscoring the need for a relatively large dataset. However, Covec generally supported the Commission's approach taken in the draft STD.

980. Covec submitted that the discount for bulk connections used in the draft should be larger than the 25% discount applied to the full UCLL connection charge, due to the larger economies of scale associated with sub-loop connections. According to Covec, sub-loop connection services are on a steeper part of the average cost curve compared to full loop connections.[502]

981. Covec briefly commented on relinquishment, and generally agreed with the position in the draft STD, that no relinquishment charge should apply.

Vodafone

982. In terms of the non-recurring connection charges, Vodafone submitted that if the connection charge at a cabinet is to be set at a higher level than the connection charge at the Exchange, the bulk discount applying at the cabinet should also be higher than the 25% discount used by the Commission for connections at the Exchange.[503]

Orcon/Kordia/CallPlus

983. Orcon/Kordia/CallPlus submitted that the connection charge for Sub-loop UCLL should be higher than for full UCLL, but the benchmarked mark-up of 74% used in the draft STD is significantly too high, as a technician could visit several cabinets in one area and perform almost as many tasks as during an Exchange visit.[504]

Other submissions

Telecom (Chorus)

984. Telecom (Chorus) submitted that there is a regulatory risk that the Commission will set sub-optimal prices, and that this risk is asymmetric with the detrimental effect of under-pricing (less investment) being greater than that of over-pricing.

---

[501] Covec, *Submission: Access to Sub-loop Services*, 15 October 2008, Figure 2.
[502] ibid, page 8.
[503] Vodafone, *Submission on draft Sub-loop Services STD*, 15 October 2008, page 7.
[504] Orcon, Kordia, CallPlus, *Submission on draft Sub-loop Services STD*, 15 October 2008, paragraph 37.

According to Telecom (Chorus), the Commission should take this into account when selecting price points for the Sub-loop Services. Specifically, Telecom (Chorus) submitted that the Commission should set the following:[505]

- a sub-loop backhaul price using the regression methodology used for UCLL backhaul, but use the mean plus one standard error;
- a sub-loop co-location price including WACC plus a margin; and
- a sub-loop UCLL price point set at the 75th percentile.

Telecom (Group)

985. Telecom (Group) argued that key regulatory principles for 'next generation' investment include the need for regulation to be applied in a predictable and consistent way, and for a tailored approach that reflects, for example, higher risks associated with 'next generation' investments.[506]

986. According to Telecom (Group), the draft STD prevents Telecom from earning an adequate return on its FTTN investment – in particular, by capping the sub-loop UCLL and backhaul prices at the full UCLL price, Telecom is prevented from receiving any "additional benefit" from its FTTN investment. In addition, by defining a "raw, low-value backhaul service over new fibre", the draft would not allow Telecom to benefit from new services.

Professor Hausman

987. Professor Hausman argued that the uncertainty around sub-loop demand is significantly higher than for full loops:[507]

> Compared to the demand for full loops, which has a much lower level of uncertainty because for most customer premises loops from Chorus will be used by Telecom business units or its competitors, the amount of uncertainty for sub-loop demand is significantly higher.

988. Professor Hausman claimed that the greater uncertainty surrounding demand for Sub-loop Services creates an 'option value' of waiting in order for investors to gain further information on whether significant demand for Sub-loop Services will actually occur. If the sub-loop network is built now, this option is lost.[508]

989. Professor Hausman submitted that other regulators are recognising the importance of real options. For example, he submitted that Ofcom has recognized that demand uncertainty and real options are an important consideration in the context of NGN investments.[509]

[505] Telecom (Chorus), *Cross-submission on draft Sub-loop Services STD*, 31 October 2008, paragraph 75.
[506] Telecom (Group), *Submission on draft Sub-loop Services STD*, 15 October 2008, paragraph 19.
[507] Professor Hausman, *Submission on draft Sub-loop Services STD*, 14 October 2008, paragraph 7.
[508] ibid, paragraph 8.
[509] ibid, paragraph 10.

990. According to Professor Hausman, the Commission has mistakenly ignored Telecom's opportunity cost of its existing network.[510]

Vodafone

991. Vodafone submitted that it generally supported the draft STD, noting a "steady improvement in the content of STDs for fixed line services since their inception".[511]

Other cross-submissions

LECG

992. In its cross-submission, LECG proposed that the 75th percentile observation be used in order to address asymmetric risks from potential regulatory error. According to LECG, this is consistent with what the Commission has done in previous benchmarking determinations.[512]

993. As a result, their proposed Sub-loop UCLL benchmark increased from $20 per month (LECG initial submission), to $21.58 per month (LECG cross-submission). LECG also proposed increases in the sub-loop backhaul prices, and implied an increase in sub-loop co-location charges by allowing a margin to be added to the cost-of-capital used in the annualisation of Distribution Cabinet costs.

Telecom (Group)

994. Telecom (Group)'s cross-submission argued that submissions from infrastructure-based operators supported prices that provide a reasonable rate of return, whereas Access Seekers were seeking a cross-subsidy from Telecom.[513]

995. Telecom (Group) supported the use of a 75th percentile benchmark point, as this would allow for project-specific risks and free options that are widely recognised as being associated with investing in Sub-loop Services.[514] Telecom (Group) submitted that as the Commission has benchmarked sub-loop UCLL against UCLL prices, the benchmarks cannot deal with the higher uncertainty associated with sub-loop UCLL, and hence the median is biased downwards. Telecom (Group) proposed using the 75th percentile.

[510] Professor Hausman, *Submission on draft Sub-loop Services STD*, 14 October 2008, paragraph 21.
[511] Vodafone, *Submission on draft Sub-loop Services STD*, 15 October 2008, paragraph 3.
[512] LECG, *Price benchmarking of sub-loop UCLL, backhaul and co-location services*, 14 October 2008, paragraph 47.
[513] Telecom (Group), *Cross-submission on draft Sub-loop Services STD*, 31 October 2008, paragraphs 9 to 18.
[514] ibid, paragraph 33.

Professor Hausman

996. Professor Hausman generally argued that Telecom (Chorus) should not cross-subsidise other parties, but that the prices should be cost-based.[515]

997. Professor Hausman also submitted that in the UCLL STD, the Commission chose to keep UCLL rates low in order to create an incentive for Telecom to invest in fibre.[516]

Vodafone

998. In its cross-submission, Vodafone commented primarily on the submissions from Telecom (Chorus) and Telecom (Group). Vodafone noted that Telecom's investment is not in a new network, but rather is upgrading the feeder component of its existing network (with the fibre feeder cables typically costing less than the copper feeder cables, and the fibre generally being installed in existing ducts).[517]

Orcon/Kordia/CallPlus

999. Orcon, Kordia and CallPlus also argued that the Telecom references to statements by Ofcom and the European Commissioner Viviane Reding about regulation of new investment are taken out of context, and that both also refer to the danger of re-monopolisation of bottlenecks.[518]

1000. According to Orcon, Kordia and CallPlus, Telecom does receive substantial benefit from its FTTN investment, by allowing new services to be delivered to End Users (either by Telecom itself, and/or by other service providers). If Telecom can offer competitive and attractive downstream services, it will benefit from the FTTN investment.[519]

1001. Orcon, Kordia and CallPlus also argued that the Sub-loop Services do not require a higher rate of return than other regulated UCLL products, as the investment by Telecom is a low risk renewal of equipment.

[515] Professor Hausman, *Cross-submission on draft Sub-loop Services STD*, 30 October 2008, paragraph 12.
[516] ibid, footnote 3.
[517] Vodafone, *Cross-submission on draft Sub-loop Services STD*, 31 October 2008, paragraph 7.
[518] Orcon, Kordia, CallPlus, *Cross-submission on draft Sub-loop Services STD*, 31 October 2008, paragraph 24.
[519] ibid, paragraph 27.

Submissions received on the 30 January 2009 consultation material

Core Sub-loop Backhaul Charges - Submissions

Vodafone

1002. According to Vodafone, the Commission's proposed inclusion of the incremental cost of further trenching will result in double-counting, as the trench costs will already be included in the copper feeder.[520] Vodafone also submitted that the Commission does not appear to have recognised its previous statement that copper cable costs are higher than fibre cable costs.[521]

1003. Vodafone also questioned the basis for the Commission's proposed adjustment to allow for a risk premium for the Sub-loop Backhaul Service.

1004. Vodafone also commented on the proposed connection charges, noting that:[522]

> the only work required for backhaul connection at the cabinet end is plugging the fibre into the Access Seeker's DSLAM, so $1,000 seems excessive for that one end. In our experience we pay $1000 for connecting both ends of a fibre, including an OTDR continuity test.

1005. Vodafone submitted that the average backhaul cost per cabinet should be recovered via the actual number of fibres used at any specific cabinet, as this is more likely to promote competition. Vodafone stated that the biggest problem Access Seekers face with the national average approach is that it is related to market share and it will result in Access Seekers paying an unreasonably high price for backhaul to the limited number of cabinets they unbundled.[523]

1006. Furthermore, Vodafone submitted that in determining the number of fibres used, fibres used for services other than the Sub-loop Backhaul Service should be included, because the cost of fibre to a given cabinet is fixed regardless of how those fibres are being used.[524]

Orcon

1007. Orcon agreed with the Commission that the use of the UCLL Backhaul pricing model would be inappropriate for the Sub-loop Backhaul Service, as the latter is provided over a dedicated fibre per Access Seeker, regardless of the bandwidth requested.[525] Orcon noted that the new proposed charges for the Sub-loop Backhaul Service represent a significant increase from the draft STD and, that as a result, this affected the commercial viability of Access Seekers' investment in Sub-loop Services. Orcon also expressed strong support for the submission by Covec.

---

[520] Vodafone, *Submission on Sub-loop consultation material*, 2 March 2009, p 1.
[521] ibid, page 2.
[522] ibid, page 3.
[523] ibid, page 2.
[524] ibid, page 3.
[525] Orcon, *Submission on Sub-loop consultation material*, 2 March 2009, p 1.

1008. On the cost of connecting the Sub-loop Backhaul Service to the cabinet, Orcon submitted that the proposed connection charge (of $1,068.42) was consistent with that expected for a commercially managed Ethernet service, but that the installation of a dedicated fibre connection is expected to be significantly lower.

Covec

1009. In its submission on the 30 January consultation, Covec made three criticisms of the Commission's proposed new approach. First, Covec argued that the 75% trench proportion was too high, as it did not take account of the higher cost of copper cable compared to fibre. Covec suggested that a trench proportion of 60% may be more appropriate.

1010. Second, Covec submitted that the Commission has double-counted trenching costs by including the cost of new trenches.

1011. Third, Covec considered that the risk premium included in the Commission's approach had not been adequately justified.

Telecom (Chorus)

1012. Telecom (Chorus) submitted that the Commission should use the UCLL Backhaul pricing model to determine the price for the Sub-loop Backhaul Service, and that the Commission's proposed new approach is not required. In commenting on the Commission's new approach, Telecom (Chorus) submitted that:[526]

> The method does not adequately account for the costs it purports to measure. This measurement of costs would be more consistent with the intended logic, and the costs we face in practice, if the four modifications discussed below were included.

1013. Telecom (Chorus) propose a number of adjustments be made:[527]

- the weighted average cost of capital (WACC) should be risk-adjusted, such that a post-tax WACC of 11.3% is used;
- the trenching proportion should be increased from 75% to 84%;
- a weighted average of the urban and non-urban trench costs should be used;
- equipment costs are recovered through the recurring charge rather than the non-recurring charge; and
- fibre jointing costs should be included, increasing the fibre-related investment from $165,875,000 to $186,000,000.

[526] Telecom (Chorus), *Submission on Sub-loop consultation material*, 2 March 2009, para 96.
[527] These proposed adjustments are set out at paragraphs 97 to 100 of Telecom (Chorus)'s 2 March 2009 submission, and paragraphs 5 to 12 of Appendix 3 of that submission.

1014. Telecom (Chorus) noted that for the UCLL backhaul service, the equipment costs are included in the benchmarked recurring charges, and not the non-recurring charges.[528]

Telecom (Group)

1015. Telecom (Group) submitted that the Commission should follow the benchmarking methodology used for the UCLL backhaul service and proposed by Telecom (Chorus) and LECG in earlier submissions on the Sub-loop Backhaul Service. According to Telecom (Group), the Commission's proposed approach is based on a simplified cost building methodology that is inconsistent with the IPP and that:[529]

> ... still reflects a fibre based approach to pricing and suffers from essentially the same flaws noted in earlier submissions on the draft STD.

1016. In commenting on the specific pricing approach proposed by the Commission, Telecom (Group) supported the Commission's adjustment of the benchmarked feeder proportion of the UCLL service to mitigate the asymmetric risk of regulatory error.[530] However, according to Telecom (Group), a further allowance needs to be made for the risks associated with investment in fibre.[531]

1017. Telecom (Group) also submitted that the Commission's proposed approach determines a price for a 1Gbps service, whereas Telecom (Chorus)'s proposed approach would provide for smaller bandwidth increments. As the bandwidth required to deliver core services is significantly less than 1Gbps, Telecom (Group) argued that the Telecom (Chorus) approach would be more likely to promote efficient cabinet entry.[532]

1018. Telecom (Group) argued that the Commission's new approach still in effect retains the "UCLL price cap", as the Sub-loop Backhaul price will always be linked to the UCLL price. As a result, Telecom (Group) argued that the Sub-loop Backhaul price will be inconsistent with forward-looking cost-based prices and therefore the UCLL STD, resulting in a cross-subsidy to Access Seekers.[533]

Vector

1019. According to Vector, the Commission's new approach does not comply with the IPP, as it is not based on benchmarking against prices for similar services in comparable countries that use forward-looking cost-based pricing.[534] Vector submitted that the new approach is based on Telecom's costs rather than on data from comparable countries with forward-looking cost-based pricing, and is

[528] Telecom (Chorus), *Submission on Sub-loop consultation material*, 2 March 2009, para101.
[529] Telecom (Group), *Submission on Sub-loop consultation material*, 2 March 2009, para 7.
[530] ibid, paragraphs 32 and 33.
[531] ibid, paragraph 34.
[532] ibid, paragraph 36.
[533] ibid, paragraph 41.
[534] Vector, *Submission on Sub-loop consultation material*, 2 March 2009, para 5.

based on the Commission's interpretation of relativity and benchmarking against a copper-based service.[535]

1020. Vector reiterated its view that the price of the Sub-loop Backhaul Service should be set according to the UCLL backhaul pricing model, as, in Vector's opinion, it is based on benchmarking against prices for similar services. Vector noted the absence of active equipment at one end of the Sub-loop Backhaul Service could be allowed for, by adjusting the connection costs of the service.

Core Sub-loop Backhaul Charges – Cross-submissions

Covec

1021. In its cross-submission, Covec comment on a number of points made in the submissions from Telecom Group and Chorus. First, on the claim that a single price for a 1Gbps service is inefficient and will not promote new entry, Covec argued that LECG's proposed prices per Mbps are in general significantly higher than those that result from the Commission's proposed approach. For example, Covec presents a number of comparisons of the LECG and Commission prices for the Sub-loop Backhaul Service, and concluded that:[536]

> ... the LECG backhaul pricing is relatively more expensive on a per-Mbps basis than the Commission's pricing for urban cabinets (where competitive entry is most likely to occur) in almost all bandwidth and distance scenarios, particularly where there are two or more access seekers in a cabinet ... it is also likely that Chorus will be over-compensated for its investment in backhaul, in many scenarios.

1022. Covec therefore disagreed with submissions by Telecom (Group) and Telecom (Chorus) that LECG's pricing would be more likely to promote efficient entry by Access Seekers, on the basis that LECG's pricing would result in higher average backhaul prices, making entry less likely.[537]

1023. Covec also responded to a claim made by Telecom that allocating average backhaul costs per cabinet across the actual number of fibres used at each cabinet would result in significant risk for Telecom (Wholesale) and Access Seekers. This is because the resulting backhaul charge at a particular cabinet would fluctuate as Access Seekers enter and leave that cabinet.

1024. Covec presented the results of some simulations it performed, in which the average total backhaul cost per month is calculated for Telecom (Wholesale) and three other Access Seekers who are assumed to enter varying numbers of urban cabinets. Covec considered various scenarios relating to the level of entry by Access Seekers (i.e., not including Telecom (Wholesale)), and the level of cabinet turnover. Covec's results indicated that while allocation using actual fibres used at each cabinet does introduce some risk in terms of backhaul cost

[535] Vector, *Submission on Sub-loop consultation material*, 2 March 2009, paragraph 6.
[536] Covec, *Cross-submission on Sub-loop consultation material*, 20 March 2009, p 4.
[537] ibid, p 5.

variations,[538] these risks are likely to be quite small across all cabinets that an Access Seeker enters.[539]

Telecom (Chorus)

1025. In its cross-submission, Telecom (Chorus) claimed that the Commission's proposed approach is inconsistent with both the IPP and a price that would result from the FPP, and lacks a clearly articulated set of costing or pricing principles.[540] Telecom (Chorus) argued that in the absence of such a set of principles and a legislative mandate to develop such principles under the IPP, the Commission must adopt the prices established for the UCLL/UBA backhaul services.[541]

Telecom (Group)

1026. In its cross-submission, Telecom (Group) claimed that the Commission's proposed approach is a:[542]

> mix of ad hoc cost elements, based on the benchmarking of some elements, and the direct costs of others, means that the resulting costs are assumption driven rather than actually reflecting the underlying cost structure.

1027. In responding to submissions by Covec, Vodafone, and Orcon on the treatment of risk, Telecom (Group) argued that there are two sources of risk. First, there is project-specific risk associated with investment in next generation access networks; and second, there is a risk of regulatory error where the implications of such an error are asymmetric. According to Telecom (Group), the Commission's proposed approach has correctly adjusted only for the latter, although no compensation has been allowed for project-specific risk.[543]

NERA

1028. NERA submitted that it is important to note that the objective function of the Telecommunications Act is not to promote competition per se, but rather to promote competition for the long-term benefit of end-users. Consequently, NERA submitted that, for example, it would not be appropriate to promulgate a policy that facilitated short-term competition, but at the expense of efficient entry, longer-term competition and investment.[544]

1029. NERA submitted that while the Covec report is correct that there are pros and cons to both approaches, it is not immediately obvious that "on balance" the cabinet-specific option is more likely to promote competition. NERA submitted that it is plausible that because the national-average option involves lower risk than the cabinet-specific option, it is more conducive to entry even if prices are higher. NERA noted that the standard conclusion of real options theory is that

---

[538] As measured by the standard deviation of the total backhaul cost.
[539] Covec, Cross-*submission on Sub-loop consultation material*, 20 March 2009, p 9.
[540] Telecom (Chorus), *Cross-Submission on Sub-loop consultation material*, 20 March 2009, para 25.
[541] ibid, para 27.
[542] Telecom (Group), *Cross-Submission on Sub-loop consultation material*, 20 March 2009, para 8.
[543] ibid, paragraph 12.
[544] NERA, *Sub-loop backhaul: pricing methodology and risk adjustment*, 20 March 2009, p 2.

uncertainty delays investment, and therefore, from this perspective the national-average option may be more conducive to entry.[545]

1030. NERA submitted that the cabinet-specific option does not represent the type of pricing that is observed in real world markets, competitive or otherwise. NERA submitted that when a firm has fixed costs and an uncertain customer base, it forecasts how many customers it will have and then it calculates prices accordingly.[546]

1031. NERA further submitted that the cabinet-specific option would (quite starkly) lead to the odd outcome that if demand for backhaul services drops, the price of backhaul would rise (and vice versa). This is contrary to the predictions of economic theory, and to observations of real world behaviour.[547]

1032. NERA concluded that neither the cabinet-specific option nor the national-average is entirely satisfactory, but in its view, the national-average option is the better of the two.[548]

1033. In relation to risk adjustment, NERA submitted that the risks of the regulator making an error in parameter selection are asymmetric, and thus regulators often select the 75th percentile of the cost of capital distribution to acknowledge this. NERA submitted that the Commission's approach could be said to account for either the greater risk of fibre investment, or the asymmetric social cost of regulatory error, but not both. NERA further submitted that adopting the 75th percentile to address asymmetric regulatory error is distinct from estimating the correct parameters for the cost of capital.[549]

1034. NERA submitted that an approach that better takes into account both risks would be to start by separately estimating the cost of capital for a fibre based investment, and then selecting the 75th percentile to account for the risk of regulatory error.[550]

1035. In relation to risk transfer, NERA submitted that the Covec report does not argue that fibre-based backhaul is not riskier than UCLL backhaul, but rather argues that there is no risk for Chorus at all. NERA submitted that this presumably implies that Chorus should receive no more than the risk free rate of return on its investment. NERA argued that this conclusion is likely to be incorrect, because even if Telecom Wholesale has committed to entering every cabinet initially, it presumable has the option to withdraw if demand does not materialise.

1036. Furthermore, NERA submitted that even if Telecom Wholesale does not have that option, then it is not that the risk has disappeared, but simply that it has been transferred from Chorus to another part of Telecom (Telecom Wholesale).[551]

---

[545] NERA, *Sub-loop backhaul: pricing methodology and risk adjustment*, 20 March 2009, p 3.
[546] ibid, p 3.
[547] ibid, p 4.
[548] ibid, p 4.
[549] ibid, p 5.
[550] ibid, p 5.
[551] ibid, p 5.

Submissions received on the 20 April 2009 consultation material

Sub-loop Backhaul Service

Assessment against the IPP

1037. Telecom (Group) submitted that the only approach that complies with the IPP is the UCLL Backhaul pricing model, and that the fibre-based pricing model is a clear departure from the IPP as, even though one input involves some benchmarking, it involves bottom up cost modelling.[552] Telecom further submitted that it is only appropriate to depart from the IPP in very rare instances and they do not apply here, as there are relevant benchmarks.[553] Telecom considered that the fibre-based approach is more like a final pricing principle.[554]

1038. Telecom (Chorus) submitted that the only option that complies with the IPP is the UCLL Backhaul model.[555]

1039. Covec submitted that both the fibre-based and UCLL Backhaul options can be classified as benchmarking and the main issue is the extent to which the benchmarked services are similar to the Sub-loop Backhaul Service. Covec noted that even if the UCLL Backhaul benchmarks are adjusted to reflect that active equipment is only at one end of the service, the distances of the benchmarked services not sufficiently similar to those in New Zealand. Covec considered that the fibre-based pricing model better met the IPP, given that trenching component of the UCLL service and Sub-loop Backhaul Service are very similar.[556]

1040. Covec clarified this position in its cross-submission, noting that it considered both approaches to be "adjusted benchmarking", where adjustments have been made to take into account the nature of the Sub-loop Backhaul Service and the constraints the Commission faces in obtaining prices for similar services in comparable countries.[557]

1041. Covec also cross-submitted that the IPP allows a price to be set quickly, so that End Users can obtain the benefits of regulated services without going through the time and expense of setting a price under the FPP.[558]

1042. Vodafone submitted that both the fibre-based and UCLL Backhaul options can be classified as benchmarking, even if they involve departure from a literal interpretation of the IPP. Vodafone believed that the fibre-based approach more appropriately meets the requirements of the IPP because the trenching distances are the same as the UCLL feeder distances and other components are estimated in a more reasonable manner.[559]

---

[552] Telecom (Group), *Submission on Sub-loop consultation material*, 4 May 2009, p 6.
[553] ibid, p 19.
[554] ibid, p 19.
[555] Telecom (Chorus), *Submission on Sub-loop consultation material*, 4 May 2009, p 4.
[556] Covec, *Submission on Sub-loop consultation material*, 4 May 2009, p 4.
[557] Covec, *Cross-submission on Sub-loop consultation material*, 11 May 2009, p 2.
[558] ibid, p 1.
[559] Vodafone, *Submission on Sub-loop consultation material*, 4 May 2009, p 4.

1043. Vector submitted that unless all components of the IPP are met, then the IPP is not met at all. However, Vector also stated that in analysing the options against the four components of the IPP, it considers that the modified UCLL Backhaul pricing model better complies with the IPP than the fibre-based model.[560]

1044. Covec cross-submitted that Vector's interpretation of the IPP is too narrow given the informational constraints faced by the Commission.[561]

<u>The approach that best balances the incentives to provide the service, and incentives to take-up the service</u>

1045. Covec considered that given both pricing approaches make use of benchmarking as required by the IPP, but that adjustments are required, the Commission should choose the approach that best achieves the purpose of the Act. Covec considered that the fibre-based model would generate the most accurate estimate of the price set under the FPP, especially given the potential for significant over- and under-recovery of costs under the UCLL Backhaul model.[562]

1046. Telecom (Chorus) submitted that the UCLL Backhaul model best balances these incentives because it:

- encourages Telecom to take a long-term view of bandwidth take-up;
- provides Telecom with an incentive to extend the distance of the Sub-loop Backhaul Service through further FTTN development; and
- provides Access Seekers with charges that increase as their customer base increases.[563]

1047. Telecom (Group) considered that the UCLL Backhaul pricing model best balances the incentives for provisioning and consuming the Sub-loop Backhaul Service for similar reasons to those provided by Telecom (Chorus). Telecom (Group) also submitted that the modified UCLL Backhaul model may have the same benefits.[564]

1048. Covec submitted that the Commission does not need to be concerned with Telecom's incentives to deploy Distribution Cabinets because Telecom has committed to deploy 3,600 cabinets as part of the Separation Undertakings and has a guaranteed customer in the form of Telecom (Wholesale). Covec considered that there would be sufficient incentives to deploy additional cabinets if Telecom receives compensation for efficiently incurred costs. Covec did not consider the UCLL Backhaul model to link regulated prices to the efficient costs of proving the service.

1049. In terms of incentives for take-up of the Sub-loop Backhaul Service, Covec considered that the fibre-based approach would better support the provision of

[560] Vector, *Submission on Sub-loop consultation material*, 4 May 2009, p 6-9.
[561] Covec, *Cross-submission on Sub-loop consultation material*, 11 May 2009, p 3.
[562] ibid, p 2.
[563] Telecom (Chorus), *Submission on Sub-loop consultation material*, 4 May 2009, p 4.
[564] Telecom (Group), *Submission on Sub-loop consultation material*, 4 May 2009, p 29.

higher speed telecommunications services, which is the objective of sub-loop unbundling.[565]

1050. Vodafone submitted that given Telecom will have appropriate incentive to invest if it is adequately compensated for efficiently incurred cost and there is a guaranteed customer in Telecom (Wholesale), there is no need to focus further on incentives for provision of the service. Vodafone also submitted that the fibre-based price is preferable because it offers a cheaper 1 Gbps service, which better suits Access Seekers interested in offering more innovative higher speed services.[566]

1051. Vector indicated that the modified UCLL Backhaul model provided the best investment incentives for provision of the service as prices are based on the key cost drivers – distance and bandwidth. Vector also submitted that the modified UCLL Backhaul model also aligns pricing with the UCLL and UBA Backhaul Services, thereby allowing more consistent pricing signals on the cost of a managed Ethernet service.[567]

1052. Vector considered the UCLL Backhaul pricing model to better promote take-up of the Sub-loop Backhaul Service as it provided a range of bandwidth options at different prices. Vector noted that, in contrast, the fibre-based model did not send very good signals regarding distance and bandwidth, led to perverse outcomes where non-urban backhaul was more expensive than urban backhaul and had greater pricing uncertainty for Access Seekers.[568]

1053. Covec cross-submitted that it did not consider these price signals to be any better than the price signals under the fibre-based approach for promoting competition in high-speed broadband services. Rather, Covec considered that the UCLL Backhaul prices would discourage higher-speed services if a large amount of bandwidth is required. Covec also considered that efficient price signals should be aligned with costs, and that this is not the case for the UCLL Backhaul price.[569]

Adjustments to the fibre-based pricing model

1054. Telecom (Chorus) supported the inclusion of a separate mark-up for fibre jointing costs in the Commission's proposed fibre-based pricing model.[570]

1055. Telecom (Group) submitted against the cost of capital proposed by the Commission on the basis that it does not compensate Telecom for all of the risks it faces.

1056. Telecom (Group) also submitted that the Commission should not exclude the proposed mark-up for "Chorus overhead costs" on the basis that this mark-up is

[565] Covec, *Submission on Sub-loop consultation material*, 4 May 2009, p 4-5.
[566] Vodafone, *Submission on Sub-loop consultation material*, 4 May 2009, p 4.
[567] Vector, *Submission on Sub-loop consultation material*, 4 May 2009, p 8.
[568] ibid, p 8-9.
[569] Covec, *Cross-submission on Sub-loop consultation material*, 11 May 2009, p 6.
[570] Telecom (Chorus), *Submission on Sub-loop consultation material*, 4 May 2009, p 3.

the allocation used in the TSO calculation and reflects an allocation of the shared costs Telecom (Chorus) must incur to provide the service.[571]

1057. Covec submitted that it is appropriate for the Commission to exercise some judgement as to whether the costs claimed by Telecom are efficient. Accepting costs claimed by Telecom without sufficient verification may send the wrong signals to future investors in assets that use the regulated services. Covec specifically agreed that a specific mark-up for "Chorus" operating costs associated with active equipment is not required as the Commission has already included an opex mark-up in the price of the fibre.[572]

1058. Vodafone requested that the Commission ensure that there is not any double-counting of costs and re-stated the concern regarding a separate mark-up under the fibre-base pricing model for new trenches. Vodafone also noted that if the Commission decided against a dark fibre service, then it considered the Commission's cost estimate in relation to Telecom's Ethernet switch to be reasonable (although the costs associated with a media converter may be different).[573]

1059. In response to concerns in relation to the treatment of new trenches, Telecom (Chorus) reiterated a concern expressed earlier that without a clear set of articulated principles it is difficult for parties to be confident that the calculation methodology applied under the fibre-based pricing approach is consistent with the IPP.[574]

Lawful intercept costs

1060. Telecom (Chorus) supported the inclusion of costs for providing capability of lawful intercept costs.[575]

1061. Telecom (Group) submitted the costs of providing lawful interception capability should be included in the fibre-based pricing model because Telecom is under a legislative requirement to provide the capability for lawful interception of the Sub-loop Backhaul Service, and that the costs of providing this functionality are therefore unavoidable.[576]

1062. Covec submitted that lawful intercept costs should not be included in the Sub-loop Backhaul price as the obligations falls on Access Seekers to provide the necessary facilities for interception and Access Seekers can provide such facilities at a point in their own network.[577]

1063. Vodafone submitted that no compensation should be due to Telecom in relation to provision of lawful intercept functionality because the obligation to provide

[571] Telecom (Group), *Submission on Sub-loop consultation material*, 4 May 2009, p 25.
[572] Covec, *Submission on Sub-loop consultation material*, 4 May 2009, p 1.
[573] Vodafone, *Submission on Sub-loop consultation material*, 4 May 2009, p 2-3.
[574] Telecom (Chorus), *Cross-submission on Sub-loop consultation material*, 11 May 2009, p 3.
[575] Telecom (Chorus), *Submission on Sub-loop consultation material*, 4 May 2009, p 3.
[576] Telecom (Group), *Submission on Sub-loop consultation material*, 4 May 2009, p 26.
[577] Covec, *Submission on Sub-loop consultation material*, 4 May 2009, p 2.

this service rests with the retail service providers (such as Vodafone and Telecom Retail).[578]

Equipment deduction to the UCLL Backhaul pricing model

1064. Covec considered that an adjustment would need to be made to the data used to generate the UCLL Backhaul model to reflect that active equipment is provided at only one end of the service, not both ends as in the case of the UCLL Backhaul benchmarks.[579]

1065. Covec stated that the deduction of $375 was effective but simplistic and suggested that the Commission take into account the extent that transmission over longer distances requires more expensive active equipment by obtaining relevant cost estimates for fibre services over different distances.[580] Telecom (Group) cross-submitted that such an adjustment would likely increase the price of the service and reiterated the position that no adjustments should be made due to a lack of information regarding the UCLL Backhaul benchmarks and the need to stick to a proper application of an IPP.[581]

1066. Vodafone agreed with the Commission's proposal to deduct Telecom's estimated port cost from the UCLL backhaul pricing model.[582]

1067. Vector supported the approach taken by the Commission in adjusting the UCLL Backhaul pricing model.[583]

1068. LECG noted that deduction to the UCLL Backhaul benchmarks to reflect that active equipment is only provided at one end of the service should be based on the incremental cost that the Access Seeker faces in supplying the relevant equipment at the cabinet (which is estimated at $0 - $27.50, compared to the Commission's estimate of $375).[584]

1069. Covec cross-submitted that LECG's approach to determining the equipment deduction is clearly incorrect. Covec considered that given that the UCLL Backhaul model was developed to set the price for the UCLL Backhaul service, the correct adjustment is to subtract an estimate of the active equipment at one end of the UCLL Backhaul link.[585]

1070. Telecom (Group) supported the Commission's conclusion that the UCLL Backhaul benchmarks include active equipment at both ends of the service. Telecom (Group) further submitted that if the Sub-loop Backhaul Service includes active equipment at only one end of the service, then it would be appropriate to adjust the cost determined by the benchmarking exercise using the same method proposed by LECG. Telecom (Group) considered that the

[578] Vodafone, *Submission on Sub-loop consultation material*, 4 May 2009, p 3.
[579] Covec, *Submission on Sub-loop consultation material*, 4 May 2009, p 2.
[580] ibid, p 2.
[581] Telecom (Group), *Cross-Submission on Sub-loop consultation material*, 11 May 2009, p 8-9.
[582] Vodafone, *Submission on Sub-loop consultation material*, 4 May 2009, p 3.
[583] Vector, *Submission on Sub-loop consultation material*, 4 May 2009, p 4.
[584] LECG, *Appendix to Telecom (Chorus) submission on Sub-loop Services consultation material*, 4 May 2009, p 2-3.
[585] Covec, Cross-*submission on Sub-loop consultation material*, 11 May 2009, p 4.

adjustments proposed by the Commission would move the service away from compliance with the IPP and the underlying costs of the service.[586]

1071. Covec cross-submitted that not all adjustments would be likely to increase error, and that in some cases (such as adjustments to reflect active equipment being supplying at only one end of the service) adjustments could be reasonably expected to reduce the potential for error.[587]

1072. Telecom (Group) also submitted that the level of adjustment to reflect different equipment costs, and the attendant risk of error, is not anticipated under the IPP. Furthermore, Telecom (Group) also considered that the port deduction of $375 would be lower for bandwidth smaller than 1 Gbps, and that the Sub-loop Backhaul bandwidth options would probably require active equipment at both ends of the service when the service is finally designed.[588]

1073. Covec cross-submitted that pro-rating the deduction according to bandwidth should result in higher low bandwidth prices, due to the higher cost of providing lower bandwidths.[589]

Distance and bandwidth options (under the modified UCLL Backhaul model)

1074. LECG proposed that in selecting the appropriate distance bands, the Commission should use the fibre-based model to cross-check that the modified UCLL Backhaul model is recovering the costs of providing the service. LECG suggested using a minimum distance band of 0-3 km in order to address the issue of under-recovery of costs at shorter distances, but maintained that its preference is for 5 km distance bands.[590]

1075. Telecom (Chorus) submitted that having both a 200 Mbps and 500Mbps service is unnecessary and that the distinction the two would not be sufficiently valued by Access Seekers, to make up for the added complexity of managing the additional product.[591]

1076. Telecom (Group) supported use of 5 km distance bands for the reasons set out by LECG. Telecom (Group) also submitted that the Commission should remove the 25 Mbps bandwidth option and only provide a 200 Mbps or 500 Mbps option.[592]

1077. Covec submitted that there is no reason to use distance bands under the modified UCLL Backhaul model, and that a large number of bandwidth options should be provided in order that there is sufficient flexibility for Access Seekers.[593]

---

[586] Telecom (Group), *Submission on Sub-loop consultation material*, 4 May 2009, p 22-23.
[587] Covec, *Cross-submission on Sub-loop consultation material*, 11 May 2009, p 3.
[588] Telecom (Group), *Submission on Sub-loop consultation material*, 4 May 2009, p 22-23.
[589] Covec, *Cross-submission on Sub-loop consultation material*, 11 May 2009, p 4.
[590] LECG, *Appendix to Telecom (Chorus) submission on Sub-loop Services consultation material*, 4 May 2009, p 5.
[591] Telecom (Chorus), *Submission on Sub-loop consultation material*, 4 May 2009, p 3.
[592] Telecom (Group), *Submission on Sub-loop consultation material*, 4 May 2009, p 24.
[593] Covec, *Submission on Sub-loop consultation material*, 4 May 2009, p 3.

1078. Telecom (Group) cross-submitted that Covec's suggestion to include all multiples of 100 Mbps up to 1 Gbps would add billing complexity, is not what Access Seekers generally want and does not correspond to the structure of the costs.[594]

1079. Vodafone considered that it may be better to use the pricing formula based on actual distances rather than distance bands, to more closely align the pricing with the underlying cost, particularly where distances are as short as they are. Vodafone also submitted that if, regardless of their preference, the Sub-loop Backhaul Service was to have multiple bandwidth steps, then more options between 20 Mbps and 1 Gbps would be desirable.[595]

1080. Telecom (Chorus) cross-submitted that use of the pricing formula for specific distances is not logically preferable than using distance bands on the basis that the Commission proposes using radial distance (rather than cable distance), and because it would complicate processes such as billing. Telecom (Chorus) also considered that the 0-5 km distance bands would address the issue of abnormally low prices at shorter distances.[596]

1081. On the issue of bandwidth, Telecom (Chorus) cross-submitted that given the number of different bandwidth options proposed by parties, that the Commission should seek more information from potential users of the service on bandwidth requirements.[597]

1082. Covec cross-submitted that Telecom (Group) and LECG claim that the UCLL Backhaul approach is the best approach for pricing, but then simultaneously argue that this approach is unsuitable for estimating prices at short distances. Covec considered that use of the 0-5 km distance band would nullify any advantage that the UCLL Backhaul pricing model has over the Commission approach in being able to reflect different backhaul distances for different cabinets.[598]

1083. Covec also submitted that the fact that offering multiple bandwidths increases Telecom's costs is another reason to use the fibre-based model.[599]

1084. Vector supported the use of distance bands of 1 km (up to 5 km) on the basis that the vast majority of Sub-loop Backhaul distances are less than 5 km. Vector also submitted in favour of the Commission's proposed number of bandwidth options.[600]

---

[594] Telecom (Group), *Cross-submission on Sub-loop consultation material*, 11 May 2009, p 9.
[595] Vodafone, *Submission on Sub-loop consultation material*, 4 May 2009, p 3.
[596] Telecom (Chorus), *Cross-submission on Sub-loop consultation material*, 11 May 2009, p 4-5.
[597] ibid, p 5.
[598] Covec, *Cross-submission on Sub-loop consultation material*, 11 May 2009, p 5.
[599] ibid, p 6.
[600] Vector, *Submission on Sub-loop consultation material*, 4 May 2009, p 5.

Practical issues

1085. Telecom (Group) submitted that it does not consider there to be any practical issues with re-parenting of cabinets to different Exchanges (presumably if the UCLL Backhaul pricing model is applied).[601]

1086. Covec noted that while the UCLL Backhaul model is better suited to accommodating changes in distances between cabinets and Exchanges, they did not consider that advantage to be sufficient to outweigh the disadvantages of that approach. Covec also proposed that if there is a systematic change to the distance, then this could be accommodated in the Commission's proposed fibre-based approach given that distance of fibre deployed is an input.[602]

1087. Vodafone submitted that it did not consider accommodating changes in distance between cabinets and Exchanges to be a priority given that such changes will not be a likely occurrence.[603]

1088. Telecom (Chorus) cross-submitted that the IPP was not designed to be updated with cost information, as suggested by Covec and Vodafone. Telecom (Chorus) also noted hat it was deeply concerned about the practicalities of updating the Commission's fibre-based pricing model over time, given the lack of pricing principles.[604]

1089. Vector submitted that any information used to derive regulated prices should be updated on a regular basis. Specific mention was made that the distance of the backhaul fibre were unlikely to change regularly, but may change occasionally. Vector proposed that prices for each Sub-loop Backhaul Service should be updated by Telecom annually or within one month of a material change.[605]

[601] Telecom (Group), *Submission on Sub-loop consultation material*, 4 May 2009, p 28.
[602] Covec, *Submission on Sub-loop consultation material*, 4 May 2009, p 3.
[603] Vodafone, *Submission on Sub-loop consultation material*, 4 May 2009, p 4.
[604] Telecom (Chorus), *Cross-submission on Sub-loop consultation material*, 11 May 2009, p 5.
[605] Vector, *Submission on Sub-loop consultation material*, 4 May 2009, p 5.

Sub-loop UCLL Connection Charges - Submissions

Covec

1090. Covec agreed that if the Sub-loop UCLL connection charge is benchmarked as a fraction of the full UCLL connection charge then the definitions used for the two connection services should be consistent. The only concern expressed with the Commission's proposed approach was in relation to the inclusion of apparent outliers. Specifically, Covec noted that the ratios for Illinois (1030%), Idaho (978%) and Minnesota (867%) were so far removed from the remainder of the dataset that they should be removed resulting in a median ratio of 105%, and a benchmarked connection charge of $78.34. [606]

Vodafone

1091. Vodafone agreed that if the Sub-loop UCLL connection charge is benchmarked as a fraction of the full UCLL connection charge then the definitions used for the two connection services should be consistent. Vodafone also noted the comments from Covec in relation to the removal of outliers from the dataset.[607]

Telecom (Chorus)

1092. In its submission, Telecom (Chorus) included material from LECG. LECG did not contest the method proposed by the Commission, but proposed amendments to the dataset where it considered the information to be incomplete or incorrect. In addition to several corrections to the data, LECG proposed including 12 additional data points from US states.[608]

1093. LECG noted that the result of amendments to the dataset used by the Commission is that the resulting ratio of the Sub-loop UCLL connection charge to the UCLL connection charge is 164.12%. LECG proposed using this ratio to derive a Sub-loop Connection charge of $122.81. As a cross-check, LECG noted that the median value of all available Sub-loop connection charges in other jurisdictions is $164.77.[609]

Telecom (Group)

1094. Telecom (Group) supported the submission made by Telecom (Chorus) in relation to including additional benchmarks from US jurisdictions.[610]

Sub-loop UCLL Connection Charges - Cross-submissions

Covec

1095. Covec cross-submitted that almost all of the new ratios are an order of magnitude greater than almost all of the ratios for the original jurisdictions.

[606] Covec, *Submission on Sub-loop consultation material,* 4 May 2009, p 5.
[607] Vodafone, *Submission on Sub-loop consultation material*, 4 May 2009, p 2.
[608]LECG, *Appendix to Telecom (Chorus) submission on Sub-loop Services consultation material*, 4 May 2009, p 1.
[609] ibid, p 1.
[610] Telecom (Group), *Submission on Sub-loop consultation material*, 4 May 2009, p 6.

Covec calculated that the median ratio for all added jurisdictions was 2,344% compared to 108% for the original jurisdictions, and that the 95% bootstrap percentile confidence intervals were 1,236% - 4,219% and 97% - 193%, respectively (indicating that the medians were statistically different).[611]

1096. Covec noted that all the higher ratios that have been added are associated with one operator (AT&T), and that the significant difference with ratios from other operators and jurisdictions suggest they reflect a factor specific to AT&T and as such are not suitable for benchmarking the connection charge for New Zealand.[612]

1097. Covec proposed that all ratios greater than 500% should be excluded on the basis that these ratios are likely to reflect specific local factors that are not relevant to New Zealand.[613]

Telecom (Chorus)

1098. In response to the concerns expressed by Covec in relation to outliers, Telecom (Chorus) noted that it did not consider that there were any outliers for the following reasons:

- all data points are form the same population data set, having been verified against price contracts;
- the fact that the dataset is highly skewed with 'fat tails' does not provide any basis to conclude that there are errors; and
- the Commission has used the median which is much less sensitive to outlier.[614]

1099. Telecom (Chorus) also noted that if the Commission considered that there is an issue with outliers, then these data points should be identified using Peirce's Criterion, which would result in the exclusion of Kansas, Oklahoma and Wisconsin. However, Telecom (Chorus) also noted that if Peirce's Criterion is applied to the log of the ratios, no outliers are identified and that the dataset is closer to a log-normal than normal distribution.[615]

Telecom (Group)

1100. Telecom (Group) supported the cross-submission from Telecom (Chorus) on the issue of the treatment of outliers. Telecom (Group) noted that observations that seem unusually higher or lower than expected may be outside the anticipated range for a number of valid reasons (in which case they should not be excluded) or for reasons which justify their exclusion (such as data gathering or entry mistakes). Telecom (Group) submitted that in the absence of such information, that there are rigorous statistical methods for evaluating the relevance of outliers,

[611] Covec, *Cross- Submission on Sub-loop consultation material,* 11 May 2009, p 8.
[612] ibid, p 8.
[613] ibid, p 8.
[614] Telecom (Chorus), *Cross- Submission on Sub-loop consultation material,* 11 May 2009, p 2.
[615] ibid, p 3.

and that the Commission should also consider whether the results change substantially as a result of removal of outliers.[616]

[616] Telecom (Group), *Cross-submission on Sub-loop consultation material*, 11 May 2009, p 6.

Cost of Capital

General approach

1101. Vodafone and Covec submitted that while the Commission's approach seems reasonable, they expressed concerns with a number of assumptions (particularly regarding the asset betas).[617]

1102. Telecom (Group) submitted that in the absence of a reliable project specific WACC for cabinets and fibre related assets, the Commission should use Telecom's post-tax cost of capital estimate with appropriate incremental adjustments to allow for investments in cabinets and fibre-related assets, respectively.[618]

Risk free rate

1103. PwC accepted the Commission's use of 5.5% for the risk free rate as reasonable.[619]

Debt premium

1104. PwC submitted that under current market conditions, a debt premium of 3% may be insufficient, though more detailed analysis would be required to derive a more robust estimate.[620]

Market risk premium

1105. PwC proposed that the market risk premium should be increased from 7% to 7.5% to account for an increase in the market pricing of risk.[621]

1106. Vector submitted that the 7% market risk premium was too low, given current financial conditions.[622]

Gearing

1107. Covec also submitted in favour of using 35% given that this is the assumption used by Ofcom for BT.[623]

1108. PwC submitted that the gearing assumption used by the Commission (30%) should be higher (35%), due to the fall in the market value of equity over the past two years. However, PwC's own estimate for Telecom's gearing over the past 5 years is 31%.[624]

---

[617] Vodafone, *Submission on Sub-loop consultation material*, 4 May 2009, p 1; Covec, *Submission on Sub-loop consultation material*, 4 May 2009, p 5.
[618] Telecom (Group), *Submission on Sub-loop consultation material*, 4 May 2009, p 10.
[619] PwC, *Appendix to Telecom (Group) submission on Sub-loop consultation material*, 4 May 2009, p 3.
[620] ibid, p 4.
[621] ibid, p 8.
[622] Vector, *Submission on Sub-loop consultation material*, 4 May 2009, p 3.
[623] Covec, *Submission on Sub-loop consultation material*, 4 May 2009, p 6.
[624] PwC, *Appendix to Telecom (Group) submission on Sub-loop consultation material,* 4 May 2009, p 4.

Asset beta

1109. Telecom (Group) argued that the Ofcom betas (for Openreach and the "Rest of BT") are not appropriate benchmarks for cabinets and fibre. According to Telecom (Group), the Openreach assets differ substantially from the cabinets, as do the "Rest of BT" assets from the fibre-based assets used for the Sub-loop Backhaul Service, and the variation in asset mix between Telecom and BT may be a potential source of error that the Commission should acknowledge in determining the cost of capital.[625]

1110. Telecom (Group) emphasised this point in its cross-submission, noting that Distribution Cabinets are likely to account for only a small proportion of Openreach's assets and that much of the fibre backhaul sits within Openreach, not BT.[626]

1111. Covec and Vodafone submitted that they do not agree that the asset and equity betas should be higher for fibre than for Distribution Cabinets, as both assets are used to provide the same service, and fibre will have a longer life than the cabinets (especially given the potential for fibre to be used in the FTTH deployment).[627]

1112. Covec and Vodafone also submitted that Telecom (Chorus) faced low overall risk in regard to its FTTN investment given Telecom (Wholesale)'s commitment to enter all cabinets. Covec submitted that the asset betas should be adjusted to 0.455 and 0.4225 for cabinets and backhaul, respectively.[628]

1113. Telecom (Group) cross-submitted that Covec's proposed adjustments are simply assumptions made without any substantive support and significantly increase the risk of regulatory error.[629]

1114. PwC noted that the Commission referred to a PwC equity beta estimate for Telecom of 1.04, which is de-levered using Telecom's 43% gearing as of 31 December 2008 to an asset beta of 0.59. PwC noted that its equity beta estimate is measured over the preceding 5 years, and that the average level of gearing over the same period should be used (31%), such that the resulting Telecom asset beta is 0.72.[630]

1115. PwC also argued that the Commission should 'benchmark the Ofcom methodology' rather than the actual figures used by Ofcom for BT. In other words, PwC proposed that the Commission should start with the Telecom NZ asset beta of 0.72 (rather than the BT beta of 0.59), then disaggregate this according to the Ofcom approach (i.e., deduct 0.1 from the Telecom NZ asset beta). PwC derived a Telecom (Chorus) asset beta (for cabinets) of 0.65

[625] Telecom (Group), *Submission on Sub-loop consultation material*, 4 May 2009, p 14.
[626] Telecom (Group), *Cross-submission on Sub-loop consultation material*, 11 May 2009, p 5.
[627] Vodafone, *Submission on Sub-loop consultation material*, 4 May 2009, p 1-2; Covec, *Submission on Sub-loop consultation material*, 4 May 2009, p 6.
[628] Vodafone, *Submission on Sub-loop consultation material*, 4 May 2009, p 2; Covec, *Submission on Sub-loop consultation material*, 4 May 2009, p 6.
[629] Telecom (Group), *Cross-submission on Sub-loop consultation material*, 11 May 2009, p 5.
[630] PwC, *Appendix to Telecom (Group) submission on Sub-loop consultation material,* 4 May 2009, p 6.

(compared to the Commission's 0.52), and a "rest of Telecom" beta (including fibre) of 0.79 (compared to the Commission's 0.65).[631]

1116. Covec cross-submitted that PwC argued to use Ofcom's methodology, rather than its specific findings, but uses Ofocm's estimate in place of real data for the relative of Telecom (Chorus) in Telecom's business.

1117. Covec suggested that an alternative method for deriving an appropriate asset beta is to compare the asset beta of those sectors covered by the PwC report that provide basic services, in same way that Telecom (Chorus) provides basic services. Covec noted that the asset beta for the 18 companies involved in agriculture, ports, property or electricity distribution was 0.33, with a 75th percentile of 0.55, which suggests that the Commission's proposed 0.52 for cabinets and 0.65 for fibre is generous.[632]

Issues not addressed by parameters with the WACC calculation

1118. PwC also raised the following issues that are related to WACC:

- undue reliance on CAPM, which does not perform well in explaining historical returns;
- asymmetric effect of setting WACC too low versus too high;
- real options forgone by the regulated entity; and
- asymmetric regulatory risk faced by the regulated entity.[633]

1119. Telecom (Group) considered the use of the 75th percentile of the benchmarking ratio to be entirely appropriate in respect of the Sub-loop Backhaul Service solely in order to deal with errors in determining the price and should not be confused with the need to take into account other aspects of risk in estimating the cost of capital.[634]

1120. Telecom (Group) noted that the risk of regulatory error is significantly heightened by Commission seeking to address complex cost of capital issues at a late stage in the process and in the manner that it has.[635]

1121. Telecom (Group) submitted that compensation is required in order to provide for a reasonable return on capital, particular given that it considers that CAPM does not cover the following elements:

- uncertainty around regulatory outcomes;
- uncertainty around the variance between the expected economic life of an asset and the actual economic life; and

[631] PwC, *Appendix to Telecom (Group) submission on Sub-loop consultation material,* 4 May 2009, p 6-7.
[632] Covec, *Cross-submission on Sub-loop consultation material*, 11 May 2009, p 13.
[633] PwC, *Appendix to Telecom (Group) submission on Sub-loop consultation material,* 4 May 2009, p 9.
[634] Telecom (Group), *Submission on Sub-loop consultation material*, 4 May 2009, p 10.
[635] ibid, p 11.

- uncertainty around the rate of technological change.[636]

1122. Vector submitted that the Commission has departed from its previous acceptance that WACC parameters are estimated with high degrees of uncertainty and the use of higher percentiles to account for this.[637]

1123. In addition, Telecom (Group) submitted that the cost of extinguishment of real options, where investment is committed to, are readily available to be valued with techniques that are no less robust than those used to estimate the CAPM cost of capital.[638]

1124. Covec cross-submitted that the value of options gained is extremely difficult to estimate, because it is subjective, and that the value of options destroyed would be 'zero' at the time of the investment (otherwise the investment would not have been made).[639]

1125. Telecom (Group) submitted that regulation using a target WACC selected by a regulator is likely to cap the profitability of a firm without limiting the risks associated with low profitability, meaning that the firm is unlikely to earn the actual cost of capital set by the regulator. Telecom (Group) indicated that this would mean that the regulator would need to allow the firm to earn a higher WACC than the target preferred by the regulator. For this reason, Telecom (Group) submitted that the Commission should consider a WACC of greater than 11.3%, and that the size of the mark-up should be explored in the work that the Commission is undertaking on the cost of capital guidelines.[640]

1126. Telecom (Group) considered that the Commission did not take into account the effect of the global financial crisis on the telecommunications industry. Telecom (Group) noted that in March 2009 Ovum released a comment indicating that as a result of the financial crisis the WACC of those communications providers surveyed had increased by approximately 1%. Telecom (Group) submitted that the particular key issues that the Commission should address, and which give rise to further regulatory error, are:

- the average yield of government bonds in New Zealand has decreased significantly;
- the likely increase in the debt premium over the past 12 to 18 months;
- the market risk premium having probably increased above New Zealand average levels; and
- the likely increase in asset beta values.[641]

[636] Telecom (Group), *Submission on Sub-loop consultation material*, 4 May 2009, p 12.
[637] Vector, *Submission on Sub-loop consultation material*, 4 May 2009, p 2.
[638] Telecom (Group), *Submission on Sub-loop consultation material*, 4 May 2009, p 12.
[639] Covec, *Cross-submission on Sub-loop consultation material*, 11 May 2009, p 11.
[640] Telecom (Group), *Submission on Sub-loop consultation material*, 4 May 2009, p 12-13
[641] ibid, p 15-16.

1127. In setting the price for the regulated services, Covec considered that compensation for risk can be made through adjusting any one (but not all) of the components of the regulated price, such as the WACC, asset life, capital costs, operating costs, expected uptake. Covec specifically considered that risk compensation was really regarding whether the size of the adjustment in price was sufficient to address relevant risks.[642]

1128. Covec did not consider the desire of Telecom's Board that Telecom (Chorus) earn a return of 11.3% on its assets as being relevant to the Commission's assessment of an appropriate WACC. In comparing this figure to 67 New Zealand listed companies in PwC's cost of capital report for December 2008, Covec found that only five companies had a WACC that was equal to or higher than 11.3% (three investment companies, a retailer that is currently expanding internationally, and a transport company that is very exposed to New Zealand's business cycle).[643]

1129. Covec also noted that the WACC that PwC estimated for Telecom was 8.2%, which is below the average for the 67 companies, and that Telecom (Chorus) is likely to face lower risk than other Telecom business units.[644] While Covec acknowledged that the appropriate WACC to use of the STD should be project specific, it considered that such a WACC is unlikely to exceed those of the NZ Stock Exchange (11.1%) and Fletcher Building (10.8%), which are highly exposed to the business cycle, or Contact Energy (10.4%), which faces weather risk which is also very difficult to diversify.[645]

Use of the cabinet life and 75th benchmarking to adjust for risk

1130. Telecom (Group) did not consider that the Commissions use of the 10-year economic life for cabinets and 75th percentile benchmarked ratio for trenching costs adequately took account of the asymmetric outcomes in setting the Sub-loop Co-location and Backhaul charges. Telecom (Group) specifically noted that using 10 years did not account for the fact that there is *uncertainty* as to the final economic life, and that the benchmarked ratio was unrelated to determination of WACC (and the proposed risk adjustments).[646]

1131. Telecom (Chorus) submitted that the economic life of a Distribution Cabinet of 10 years accounts for the risk of assets being over-built or orphaned by further developments by the government or commercial activities. Telecom (Chorus) disagreed with the Commission's proposition that the risk of asymmetric outcomes had been addressed through use of a shortened economic life of 10 years, and considered that estimation error still requires the Commission to take an estimate of the cost of capital that is above the median.[647]

1132. Vector submitted that the Commission's proposed WACCs of 8.1% for cabinets, and 9.0% for fibre, are inadequate to compensate Telecom for the asymmetric

[642] Covec, *Cross-submission on Sub-loop consultation material*, 11 May 2009, p 10.
[643] ibid p 10.
[644] ibid, p 11-12.
[645] ibid, p 11-12.
[646] Telecom (Group), *Submission on Sub-loop consultation material*, 4 May 2009, p 16.
[647] Telecom (Chorus), *Submission on Sub-loop consultation material*, 4 May 2009, p 2.

risks it faces. This is despite the shortening of the cabinet life to 10 years, due to the potential stranding risk for Telecom created by the Government's commitment to FTTH.[648]

1133. Covec cross-submitted that much of Telecom (Group)'s submission in relation to risk that CAPM does not address is in relation to the ways in which asset stranding may occur (e.g., through the outcome of the regulatory process, under-estimation of the economic life, technological change, fibre investment by the government). Covec asserted that the Commission does need to have regard to the risk of asset stranding in order to compensate Telecom for that risk. Covec considered that Telecom's investment in Sub-loop Backhaul would not be subject to the risk of stranding by the Government's FTTH investment given that much of it would likely be used in a FTTH network.[649]

[648] Vector, *Submission on Sub-loop consultation material*, 4 May 2009, p 2.
[649] Covec, *Cross-submission on Sub-loop consultation material*, 11 May 2009, p 9.